Calhoun: The NPS Institutional Archive

DSpace Repository

Theses and Dissertations | 1. Thesis and Dissertation Collection, all items

1947-09

Construction and test of an electron multiplier alpha particle detector

Dare, James Ashton; Rowen, William Howard

Cambridge, Massachusetts; Massachusetts Institute of Technology

http://hdl.handle.net/10945/6351

Downloaded from NPS Archive: Calhoun

Calhoun is the Naval Postgraduate School's public access digital repository for research materials and institutional publications created by the NPS community. Calhoun is named for Professor of Mathematics Guy K. Calhoun, NPS's first appointed -- and published -- scholarly author.

Dudley Knox Library / Naval Postgraduate School
411 Dyer Road / 1 University Circle
Monterey, California USA 93943

http://www.nps.edu/library

CONSTRUCTION AND TEST OF AN ELECTRON

MULTIPLIER ALPHA PARTICLE DETECTOR

by

Lt Cmdr. James A. Dare

and

Lt. Cmdr. William H. Rowen

Thesis
D16

Thesis
D16

CONSTRUCTION AND TEST OF AN ELECTRON MULTIPLIER ALPHA PARTICLE DETECTOR

by

JAMES ASHTON DARE
S.B., United States Naval Academy
(1939)

and

WILLIAM HOWARD ROWEN
S.B., United States Naval Academy
(1941)

SUBMITTED IN PARTIAL FULFILLMENT OF THE
REQUIREMENTS FOR THE DEGREE OF
MASTER OF SCIENCE

at the

MASSACHUSETTS INSTITUTE OF TECHNOLOGY

(1947)

Signatures of Authors: _____

_____

Department of Electrical Engineering, September 19, 1947

Certified by: _____
Thesis Supervisor

_____
Chairman, Department Committee on Graduate Students

Thesis
D16

ACKNOWLEDGMENTS

The guidance and advice of Dr. Ivan A. Getting, who supervised this thesis, was essential to its successful conclusion.

Other members of the Synchrotron Group of the Laboratory of Nuclear Science and Engineering, M.I.T., provided continual help and many useful suggestions. In particular, credit is due Joseph S. Clark for help in the realm of physics, and J. Earl Thomas for suggestions on the electronic problems.

Mr. Keith Boyer of the Emergent Beam Group of the same laboratory was very helpful in offering advice concerning pulse amplifiers and counting techniques.

7553

ABSTRACT

Starting with general drawings and information furnished by Dr. James S. Allen, the detailed drawings, assembly procedures, and processing techniques were developed by the investigation reported in this paper. Three tubes were completed, of which the last one was successfully operated and tested.

The limitations and characteristics of the electron multiplier detector are discussed and the design data for some useful associated amplifier deduced therefrom. Two of such amplifiers were constructed, tested, and used in the counting of particle sources.

A radical departure from accepted procedure in heat treating of electrodes was tried in the final tube. This process, hydrogen firing, produced multiplication and particle sensitivity such that the indicated efficiency and range of operability are appreciably better than those previously obtained by Dr. Allen.

TABLE OF CONTENTS

	Page
INTRODUCTION (J)*	1
I CONSTRUCTION AND PROCESSING OF THE MULTIPLIER DETECTOR	
CONSTRUCTION (R)	6
PROCESSING (D)	14
CONCLUSIONS AND RECOMMENDATIONS, PART I, CONSTRUCTION PHASE (R)	24
CONCLUSIONS AND RECOMMENDATIONS, PART I, PROCESSING PHASE (D)	27
II TESTING THE MULTIPLIER DETECTOR	
DIRECT MULTIPLICATION MEASUREMENTS (D) . . .	31
CIRCUITRY FOR TESTING THE ALLEN TUBE AS A PARTICLE DETECTOR (R).	38
PARTICLE COUNTING (D)	50
CONCLUSIONS AND RECOMMENDATIONS, PART II (R)	53
REFERENCES	
APPENDICES A to K	

* Entries coded "J" refer to jointly written parts of the report. Those coded "D" refer to parts written by Dare; those coded "R", by Rowen.

INTRODUCTION

The most widely used detectors of single particles at the present time are devices that detect the ionization which is produced in a gas by the passage of a nuclear particle. Detectors of this type are called Geiger-Mueller counters, proportional counters, or ionization chambers depending upon the amount of gas amplification which is utilized.* They possess many attributes such as simplicity, large sensitive area, and high efficiency, which account for their wide use.

The detector that is discussed in this paper is fundamentally different from these in that gas ionization plays no useful role in its operation. Instead, secondary electrons released from a metal surface by the impingement of a particle serve as the initial event in the detection. These secondaries pass through an electron multiplier which augments the beam current until it is large enough to produce

*A Geiger-Mueller counter is operated with an electric field in the detection region that causes a complete electrical breakdown of the gas when a single ion is produced therein. The amount of current drawn during the breakdown is the same regardless of the number of ions which were initially produced in a single detection.
A proportional counter is operated with an electric field that is sufficiently strong to produce multiple ionization in certain regions of the counter, but not to such an extent that saturation current is drawn. The current drawn by the counter in the process of detection remains proportional to the number of ions initially produced in the counter.
An ionization chamber is operated without utilizing any multiple ionization. The charge detected is just that which is formed by the particle which enters the sensitive region.

a convenient voltage pulse across the output capacity of the multiplier. A short history of the device will serve to point out its significant characteristics.

As early as 1910 it was known that certain metals, when bombarded with electrons, had the property of freeing low energy secondary electrons which exceeded the bombarding electrons in number. This phenomenon was first employed other than by accident in 1936 by Zworykin, Morton and Walter in their design of an electron multiplier tube. The first practical multiplier used magnetic focusing of the electron beam.[1] By 1939, completely electrostatic focusing had been perfected.[2]

The magnetic field was made unnecessary by so shaping the electrodes that all electron paths terminated on electrode surfaces in regions of retarding electric fields. This had the effect of causing all secondaries which were released to be accelerated toward the next electrode. The electron paths in the original electrostatic multiplier are shown in Fig. 1. This drawing was taken from the published results of the researches of Zworykin and Rajchman[2] in this field. The immediate application of the electron multiplier was to amplify the small currents originating on a photocathode.

Dr. James S. Allen, working at the University of Minnesota, first succeeded in using an electron multiplier as a particle detector. In the process of studying secondary emission from metals bombarded by protons, he observed

a measurable variable which bounds the indices according to the activities. A small survey of the Navies will serve to point out the plausibility of the assumption.

In early 1962 it was noted that Soviet naval units, when maneuvers were underway, had the property of remaining for weeks according elsewhere while exercises the activities in Europe. This phenomenon was first observed during a medium in 1962 in Norwegian, before was taken in their design of an alternate activities zone. The first analysis indicating the possible existence of the activities zone[1] in 1963, suggesting activities zone[2] were [illegible].

In example that was been considered in an attempt the identification that all activities zone variations of other zones surrounded in response or activities activities. This and the method of analysis all assumptions which were proposed to be responsible causes for such activities. The activities zone in the related activities variations are shown in fig. 2. This figure was taken from the published results of the measurements of activity and [illegible][3] in this field. The activities activities in the alternate activities zone is usually the most accurate activities in a particular.

In, there is also, because of the activities of measurements, that measures by using an alternate activities as a particular activities. In the process of analysis measurement activities zone would indicate by activities, be measured

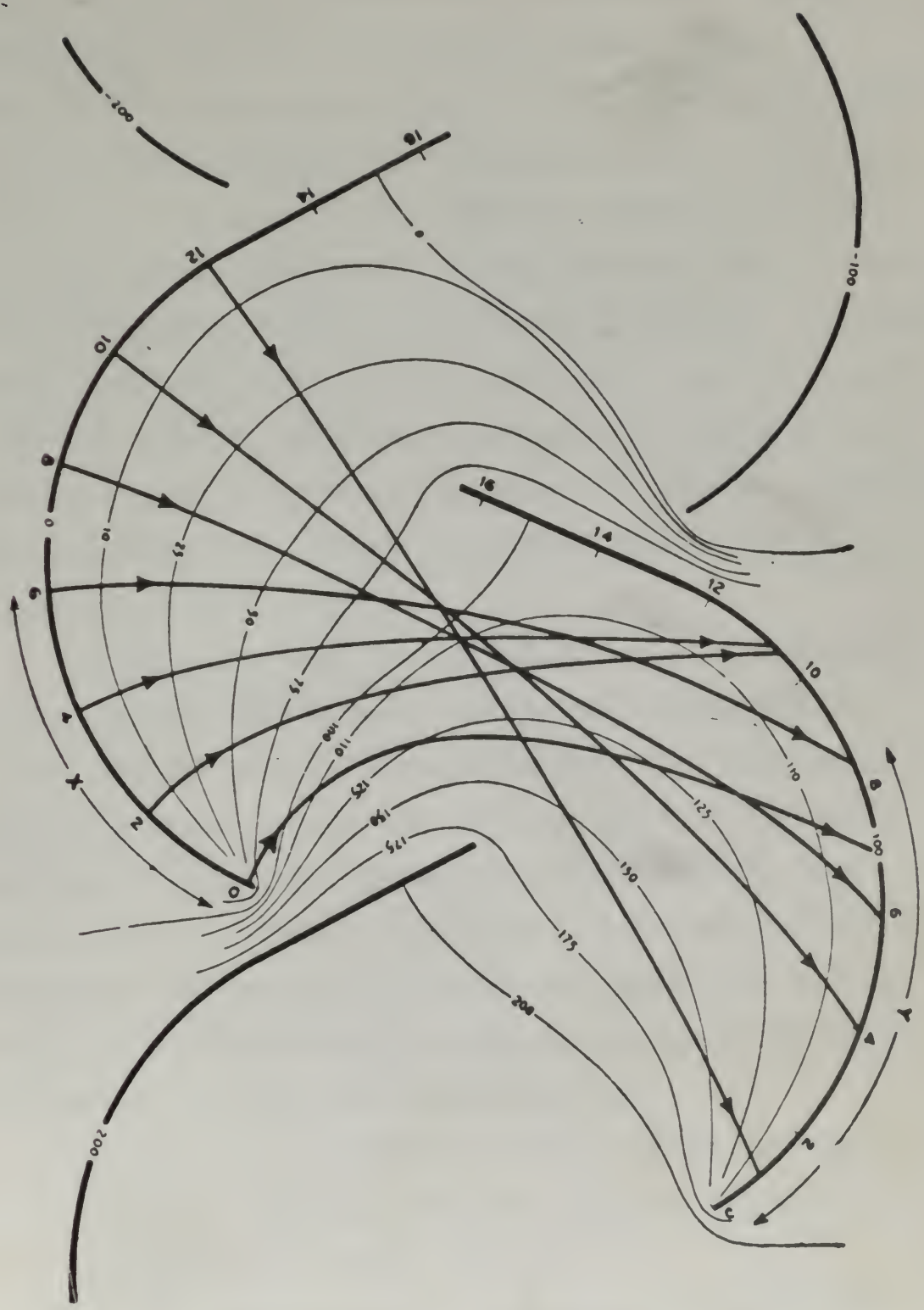

Fig. 2

that the secondary electron-proton ratio of the metals studied was about four for protons having energies of 120 keV.[3] After being outgassed most metals were found to have lower secondary electron-proton ratios, averaging about two. In the case of beryllium, however, the ratio was observed to rise to about seven or eight after it had been heated in a vacuum at 650°C for ten minutes. Kollath[4] found a similar increase in the secondary electron-primary electron ratio of beryllium when heated in oxygen as well as when heated in a vacuum and concluded that the activation was the result of a change in crystal structure on the beryllium surface.

In the Allen tube, as originally designed, the electrode surfaces were made by evaporating beryllium onto nickel plates. Later, Allen discovered that commercial beryllium copper served equally well, and the electrode surfaces in subsequent designs were made directly from sheet beryllium copper. Beryllium was used as the active element in the dynode surfaces of the multiplier as well as in the particle-sensitive cathode because it was found to possess the following characteristics:

(1) It has a secondary electron-primary electron ratio of about four after the heat treatment described above. See Fig. 2.

(2) It can withstand the outgassing temperatures without melting.

that the secondary electron-proton ratio of the metals studied was about four for protons having energies of 120 keV.[7] After being outgassed most metals were found to have lower secondary electron-proton ratios, averaging about two. In the case of beryllium, however, the ratio was observed to rise to about seven or eight after it was then heated in a vacuum at 510°C for the electron. Collins[8] found a similar increase in the secondary electron-primary electron ratio of beryllium when heated in oxygen as well as when heated in a vacuum and concluded that the activation was the result of a change in crystal structure on the beryllium surface.

In the Allen tube, as originally designed, the electrode surfaces were made by evaporating beryllium onto glass plates. Later, Allen discovered that commercial beryllium copper served equally well, and the electrode surfaces in subsequent designs were made directly from sheet beryllium copper. Beryllium was used as the active element in the dynode surfaces of the multiplier as well as in the particle-conditive cathode because it was found to possess the following characteristics:

(1) It had a secondary electron-primary electron ratio of about four after the heat treatment described above. See Fig. 9.

(2) It was attached the outgassing temperature without melting.

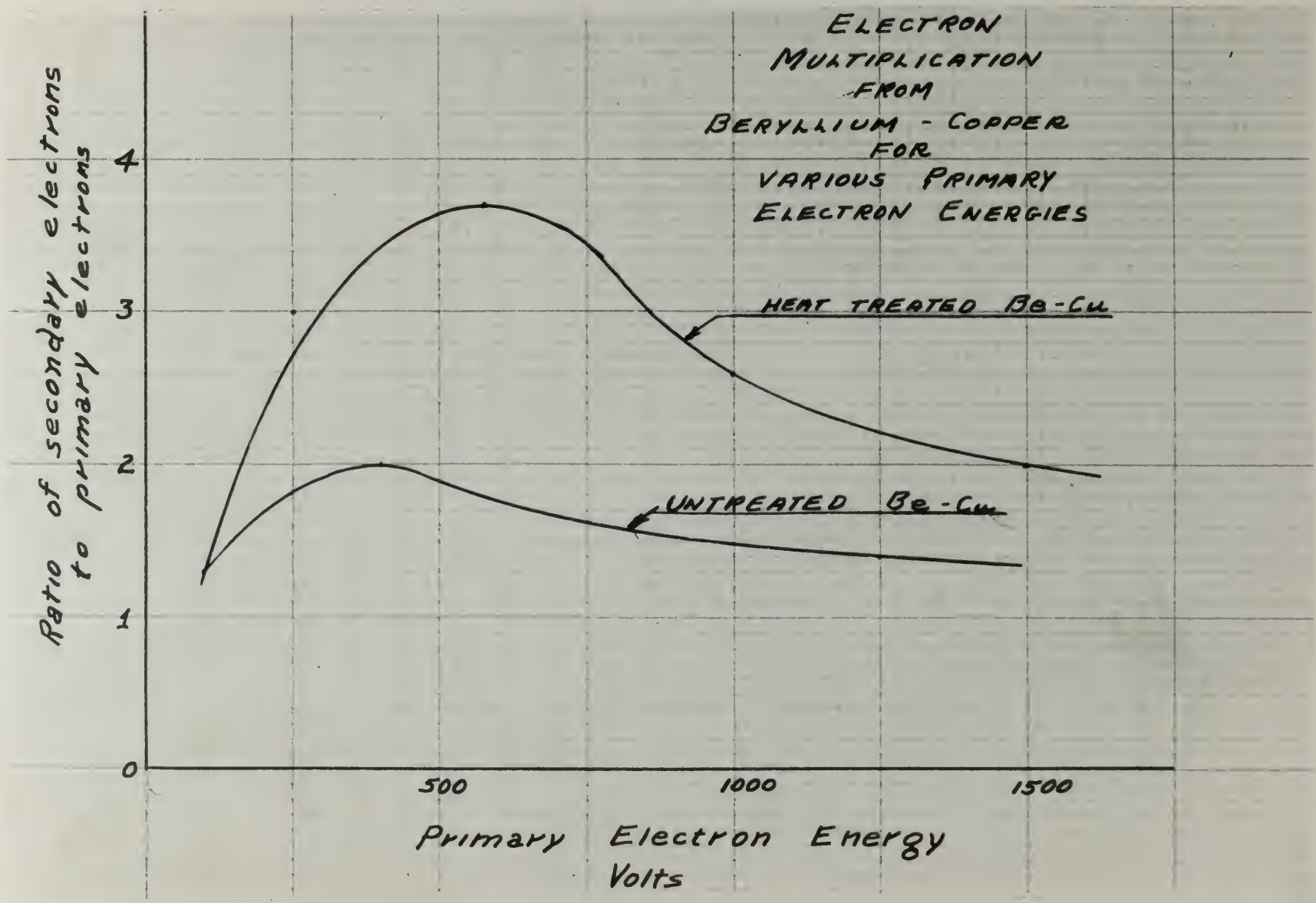
ELECTRON
MULTIPLICATION
FROM
BERYLLIUM - COPPER
FOR
VARIOUS PRIMARY
ELECTRON ENERGIES
HEAT TREATED Be-Cu
UNTREATED Be-Cu
Ratio of secondary electrons to primary electrons
0
1
2
3
4
500
1000
1500
Primary Electron Energy
Volts

Fig. 2.

(3) It oxidizes quite slowly in air, making possible the exposure of the heat treated surfaces to air during the final assembly without significant loss of activation.

(4) Its photoelectric work function is 3.92 volts, rendering it insensitive to light in the visible range.

(5) The thermionic emission at room temperatures is in the order of a few electrons per minute from any one dynode.

The advantage which Allen first claimed for the device as a particle detector was the elimination of the air path and window through which a particle from a source under vacuum must travel before it enters the conventional Geiger-Mueller counter. Since the multiplier could form part of the same vacuum system that the particle source was in, it could be used to detect particles of much lower energies than could be detected by a device that depended upon the ionization of a gas.

A second advantage of the multiplier-detector over the Geiger-Mueller counter lay in the exceptionally low background count which Allen found possible to achieve

(3) It exhibits gain nicely in air, making possible the exposure of the head treated surfaces to air during the final anomaly without significant loss of activation.

(4) The photoelectric work function is 3.98 volts, conducting it insensitive to light in the visible range.

(5) The thermionic emission of some temperatures is in the order of a few electrons per minute from any one cycle.

The advantage using alloy fluor chains for the device as a particle detector and the utilization of the air path and electron through which a particle from a source under reduce most several values it enters the conventional Geiger-Muller counter. Since the multiplier could form part of the same source system that the particle source was in, it could be used to detect particles of much lower energies than could be detected by a device that detected from the ionization of a gas.

A second advantage of the multiplier-detector over the Geiger-Muller counter lay in the unexplicitly low background count when alloy found possible to explore

using beryllium as the active electrode material*. A background of five counts per minute was observed to be typical under satisfactory operating conditions. This compares favorably with the background of 10 to 80 counts per minute, typical of a Geiger-Mueller counter.[6]

Interest in the Allen tube has recently become quite great for a different reason from the two cited above. The multiplier detector has a much shorter resolving time than any other type of particle detector now in use. Operating in a good vacuum (10^{-6} mm of Hg) it should have a resolving time of about 4×10^{-9} seconds.[7] A rough computation of the multiplier resolving time, made on the basis of certain simplifying assumptions, is presented in Appendix A. A more elaborate calculation, presented by J. Owen-Harries, yields the distribution of transit times shown in Fig. 3. In the average ionization chamber, on the other hand, ion collection time is of the order of 50 micro-seconds. This would limit the resolving time to 10^{-4} seconds. For coincidence work the effective resolving time of ionization

*This low background count is in no way inherently characteristic of electron multipliers in general. Attempts to use photomultiplier tubes with cesium oxide surfaces such as the RCA 931A as single particle detectors have not proved very encouraging because of the large background count obtained. The dark current at room temperatures in such tubes as these is about one microampere, while even when the tubes are immersed in liquid nitrogen, the background count is in the vicinity of 100 counts per minute, or twenty times that observed in the Allen tube at room temperatures!

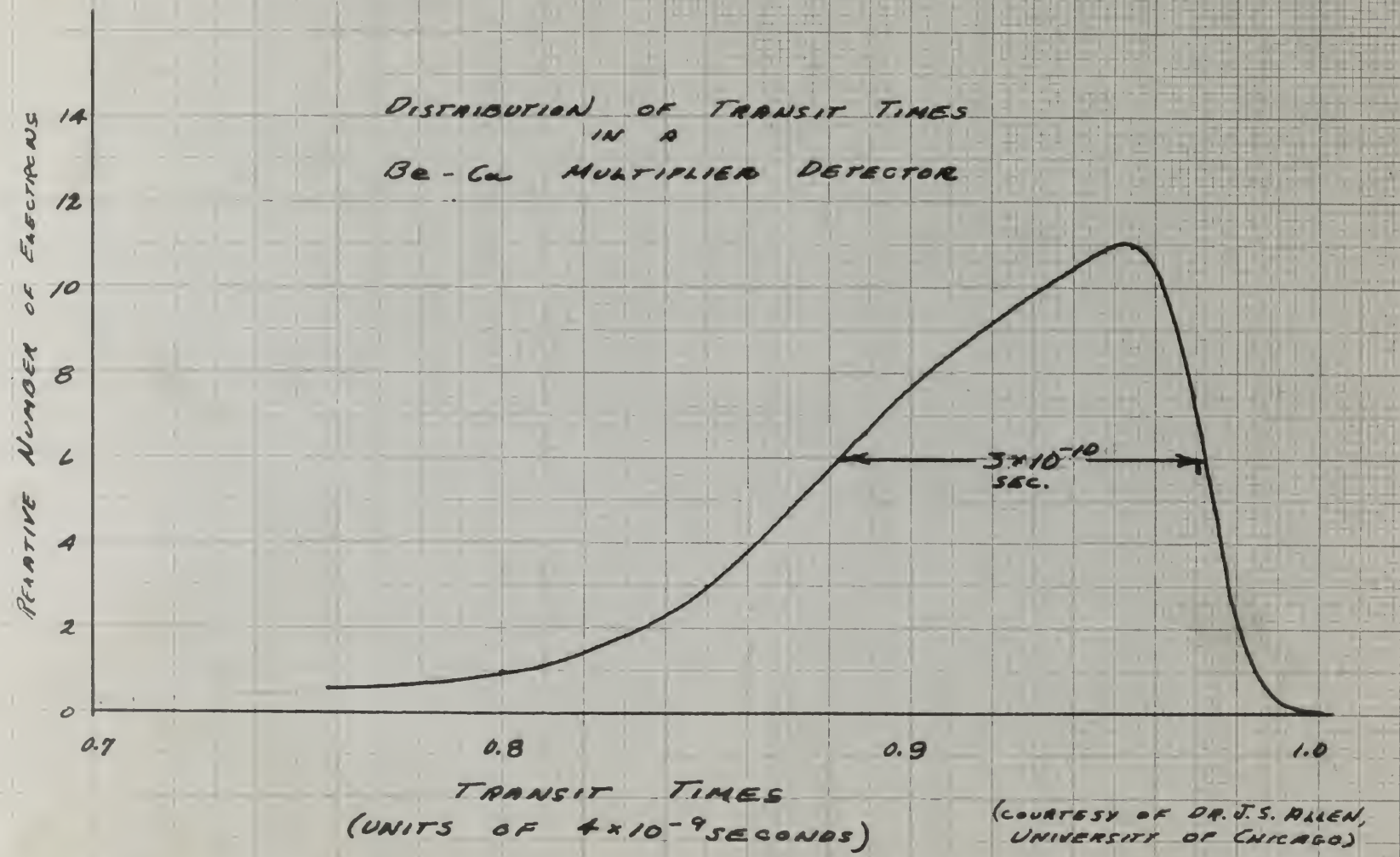

(COURTESY OF DR. J. S. ALLEN, UNIVERSITY OF CHICAGO)

FIG. 3

chambers may be made as low as 10^{-7} seconds by measuring the voltage rise resulting from electron collection only. For rapid continuous counting, however, the conventional ionization chambers, or Geiger-Mueller counters, are limited to a resolving time of 10^{-4} to 10^{-5} seconds.[8] The great reduction in detection resolving time obtained by using the Allen tube is important for two reasons. It opens the way to much more refined measurements of nuclear time intervals by coincidence techniques, and it also provides the beginning of a means of measuring the strength of very strong particle radiation such as is encountered in fission experiments.

The purpose of the work to be described was to construct, process, and test as many multiplier-detectors of the Allen design as might prove necessary to determine and overcome the difficulties involved in their construction, to learn the most practically effective method of activating their surfaces, and to observe their operating characteristics, particularly background count, alpha particle count, and electron multiplier gain, that thereby an evaluation of the device as a practical laboratory instrument might be made and suggestions for further investigation might be offered.

observers may be made to lasts as long as 10^{-7} seconds by measuring the voltage pulse resulting from electron collisions only. The rapid electronic counting, however, the conventional ionization chamber, or Geiger-Muller counter, can limited to a resolving time of 10^{-4} to 10^{-5} seconds.[9] The great innovation in detection consisting then evaluated by making the alpha pulse is important for the reason. It opens the way to much more refined measurements of nuclear time intervals to subnanosec resolution, and it also provides the beginning of a means of measuring the energies of very strong nuclear radiation such as is encountered in fission experiments.

The purpose of this work is to be concerned with electronic, processes, and thus as most multiplier-detectors of the alpha double as alpha proxy necessary to determine and preserve the differentiation involved in their generation, to learn the most practically effective method of activating their surfaces, and to observe their operating characteristics, particularly background noise, alpha pulse noise, and distortion multiplier gain. Just having an evaluation of the device in a practical laboratory instrument which be such as suggestions for further investigation might be offered.

THE STANDARD SCHOOL FLEXIBLE

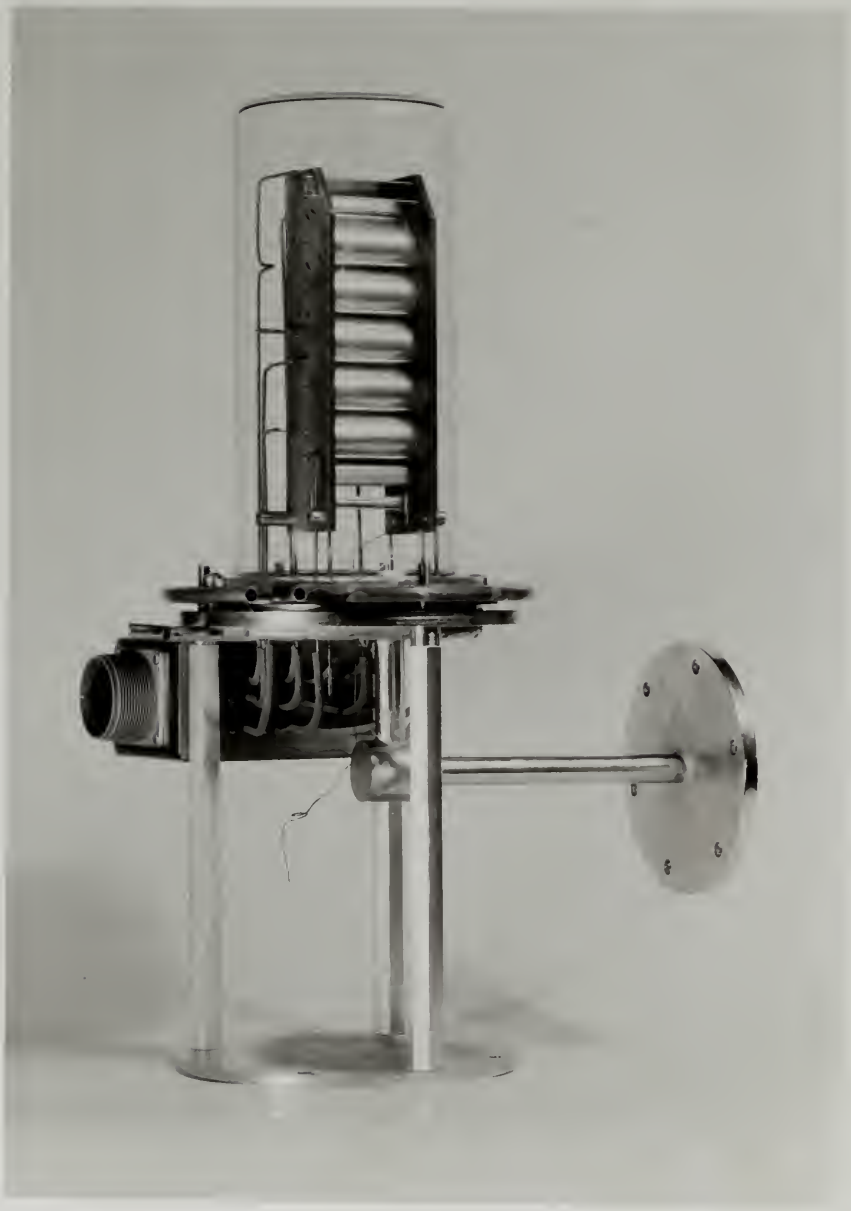

Library
U. S. Naval Postgraduate School
Annapolis, Md.

PART I

CONSTRUCTION AND PROCESSING OF THE MULTIPLIER DETECTOR

Construction

The multiplier detector was constructed according to design data furnished by Dr. Allen*, except for certain modifications which will be described later. The machine work involved in the construction of the tube was performed in the Nuclear Science and Engineering Machine Shop of the Institute**. The shop drawings prepared by the Synchrotron Laboratory of the Institute are included in Appendix C. The construction and assembly of the tube was accomplished as described in the following paragraphs.

The multiplier dynodes were made from annealed beryllium-copper. (Detailed properties of the metal used are presented in Appendix D.) They were stamped into shape and crimped to nichrome support wires as indicated on Dwg. A-1025-0 by a hand press using dies specially designed for the purpose†.

The collector electrode was originally constructed as indicated in Allen's design, but the spacing between the wires forming the collector and the surfaces of the last dynode was found to be so small that on one occasion a small amount of warping of the last dynode during the heat treating process caused the two to make contact. For this

* See Appendix B.
**Mr. Gunnar Lysell was the machinist assigned to the job.
† These dies made by Mr. Lysell are in the possession of the Synchrotron Laboratory of the Institute.

reason the collector in later tubes was made with the parallel wires spaced closer together, as indicated on Dg. A-1025-0. It was thought that the resulting reduction of capacity would not only increase the size of the output pulses, but would also reduce the electrostatic pick-up from the adjacent dynode surface.

The insulator supports were constructed of mycalex in two of the tubes and of Grade A Lavite in the others. The firing of the lava for the fourth tube was carried out in an atmosphere of hydrogen. Its color after firing was dark grey with a black granular appearance at various places on the surface. This aroused suspicion in view of the fact that the fired material was supposed to have a pink color. Its electrical resistance was found to be low for the material (in the hundreds of megohms). When the greatest part of the black material was removed, an improvement in the electrical resistance was observed. A further improvement was observed when it was heated overnight in a dessicator. It was concluded then that the particular sample of lava which was being used contained metallic oxide impurities which were reduced by the hydrogen firing leaving the fired material coated with a thin layer of metals and leaving a certain amount of water trapped in the material just under the surface. Firing pieces from the same sample in oxygen did not involve any of these difficulties. On the other hand, oxygen firing

is disadvantageous because a longer time is required for subsequent outgassing of the material.

The base flange was turned from cold-rolled steel and drilled for the electrode eyelet seals, the vacuum connection and the shell holding-down screws as indicated on Dwg. B-1025-E. A length of copper tubing was hard soldered to the base flange for cooling purposes during heat treating. The threaded collar illustrated in Dwg. B-1025-X, pc. (1), was hard soldered to the bottom of the base flange as indicated in the assembly drawing D-1025-A to serve as a mounting for a shielded connection to the preamplifier. The vacuum connection shown in detail on Dwg. A-1025-F was hard-soldered to the base flange in the position indicated on Dwg. D-1025-A. The base flange assembly together with the components of the underbody and the shell assembly, Dwgs. B-1025-C, C-1025-D, B-1025-G, B-1025-P, C-1025-Q, and C-1025-R, were nickel plated. Those parts which were made from steel were given a one mil copper plating followed by a one to two mil nickel plating. Other parts were given a one mil plating directly.

The eyelet assemblies illustrated in Dwgs. C-1025-I, C-1025-J, and C-1025-K, were made by the Nuclear Science and Engineering Glass Blowing Shop. These lead-ins were bent into the shapes indicated on Dwg. B-1025-W. They were then soldered in place in the base flange by the following procedure.

in diamagnetism becomes a lower dim if measured the magnetic moment of the material.

The Ising theory was tested from multi-metal and applied for the electrode equal masses, the results demonstrate was the small moving-zone tension in initiated on the. G-1023-c. A length or oxygen voltage was most achieved so the was finish for moving magnetic bring into transfer. The measured molar fluorescent to the. D-1023-1, pc. [1], was then measured as the bright is not back flame or indicated in the thermal flowing C-1023-1 to keep as a monitor for a distinct mechanism in the specimen. The vision measuring zone is small in the. A-1023-2 was lower-ordered in the tube flows in the positive indicated on the. D-1023-1. The tube flows mostly together with the electrons of the detector and the small tubular, Then. B-1023-2, C-1023-1, D-1023-1, D-1023-2, A-1023-1, and C-1023-2, were direct plots. These plots which were have two axes were given a the dit means during voltage of a set to the dit thermal plots. Some parts were given a set all giving tubular.

The grain measurements fluorescent in the. C-1023-1, D-1023-2, and C-1023-2, were sort by the tubular values and following time flowing only. Value 1024-1 were that into the movie fluorescent in the. B-1023-1. The more than dim values is line in the tube flows of the following grounding.

The eyelet assemblies were first cleaned by being brought to a boil in inhibited hydrochloric acid and then buffed on a brass wire wheel. They were carefully heated over a bunsen flame until solder could be applied. Boiling hydrochloric acid was applied after they had cooled somewhat. Repeated applications of solder and acid in this fashion eventually produced a uniform tinning over the exposed surfaces of the kovar eyelets.

The plated base flange with underbody assembled was also tinned in the vicinity of the eyelet holes. The eyelet assemblies were inserted in the appropriate holes as indicated on Dwg. D-1025-V with washers of soft solder placed underneath and above each eyelet flange. The eyelets were held in place by suspending weights from the lower ends of the kovar lead-in wires. Acid flux was applied and the complete assembly was placed in an electric furnace. The temperature was slowly raised to the flowing point of the soft solder (188°C). With the help of tweezers the lead-in wires were twisted into place to insure a good seating of the eyelets on the base flange. Following this, the furnace was left to cool to room temperature.

The soldered assembly was cleaned in boiling water. Three changes of water were used.

The procedure outlined above proved to be moderately vacuum tight. That is, with a two-stage diffusion pump a pressure of 10^{-4} mm. Hg. was obtained. When a small amount

The crystal assemblies were first cleaned by being brought to a boil in inhibited hydrochloric acid and then buffed on a brass wire wheel. They were carefully heated over a bunsen flame until molder could be applied. Boiling hydrochloric acid was applied after they had cooled somewhat. Repeated applications of solder and acid in this fashion eventually produced a uniform tinning over the exposed surfaces of the brass crystals.

The plated base flange with accurately concentric wire slips lined in the vicinity of the crystal holes. The crystal assemblies were inserted in the appropriate holes as indicated on Dwg. D-1003-7 with numbers of each solder plated radiometh and above each crystal flange. The crystals were held in place by suspending weights from the lower ends of the brass lead-in wires. Acid flux was applied and the complete assembly was placed in an electric furnace. The temperature was closely raised to the flowing point of the soft solder (180°C). With the help of tweezers the lead-in wires were twisted into place to insure a good seating of the crystals on the base flange. Following this, the furnace was left to cool to room temperature.

The soldered assembly was cleaned in boiling water. Three changes of water were used.

The procedure outlined above proved to be moderately vacuum tight. That is, with a two-stage diffusion pump a pressure of 10^{-4} mm. Hg. was obtained. Even a small amount

of glytol was applied on the outside of the tube in the vicinity of the seals, over the glass and solder, a pressure of about 10^{-6} mm. Hg. was obtained. Strain cracks, however, were observed in the glass. It was found in one instance that the electrical resistance across the glass seal was as low as 30 megohms compared to resistances of 200 to 1000 megohms across the seals which were not observed to have cracks. It was felt that these cracks originated during the tinning process. Attempts to obtain a tightly soldered seal between the kovar and the nickel plating when only the base flange was tinned were not successful. Copper plating of the kovar eyelets was found to make the tinning easier, but strain cracks developed nevertheless. The importance of obtaining a good vacuum without the use of substances likely to contaminate the surfaces, and of avoiding leakage currents through cracks in the seals, demanded that a better glass seal be obtained. At the suggestion of Dr. I. A. Getting of the Massachusetts Institute of Technology, the glass blower was requested to furnish a new set of glass seals, constructed as shown in Fig. 4. These possessed the advantage, when mounted in enlarged holes, of permitting a differential expansion between the eyelet flange and the glass without applying a strain directly to the glass. These eyelet seals were also superior in workmanship to those previously obtained. None of them developed strain cracks due to the tinning or soldering.

of light was applied to the metallic or the rods in the
vicinity of the cells, and the glass and solders a metal-
ric of about 10^{-5} cm. dc. was obtained. Metallic mercury,
however, was attached to the glass. It was found in the
instance that the alternating voltage across the glass
was low as 1m ac 30 megohm required to maintain of
200 to 1000 megohms across the cells which were not ex-
posed to light or dark. It was also seen that some
established during the flashing process. Attempts to metal
a flashed surface and between the layer and the glass
surface when only the most flashed was cleaned were not suc-
cessful. During flashing of the later cleaned were found to
make the cleaning method, the glass surface deteriorated
rapidly. The hypothesis of attaching a good vacuum adhesive
the use of mechanical force to counteract the movement,
and of applying Lucite surface material sealed to the cells,
suggested that a better glass seal is required. At the mo-
ment of ic. i. a. drying of the photoelectric Tantalum
of Tungsten, the glass flower was replaced to Tantalum a
two inch or glass cells, constructed in about in the. In-
these provided the attachment, then soldered in welded
holes, or plastic a electrical connection between the
metal flange and the glass stem, applied a strong
circuit to the glass. These points well were also equal
for it necessary to stress prevent cracks. Use of
the cleaning cells method in the flashing of tubes
log.

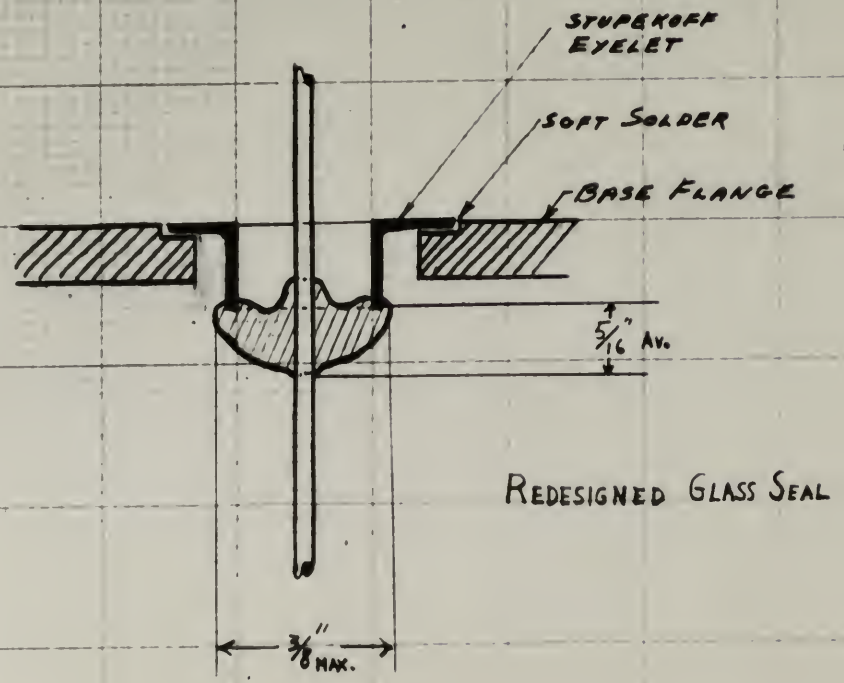

FIGURE 4.

Fig. 4

The soldering of the seals described above was performed by Dr. Getting. Two bunsen burners were played upon the base flange until it was heated to the melting point of solder. Thereafter the tinned eyelets were dropped in one at a time. The area in the immediate vicinity of the eyelet just inserted was heated with a bunsen burner as soldering acid was applied. By puddling the solder in contact with the kovar it was made to wet the flange evenly. After the second attempt, using this procedure, all seals were found to be vacuum-tight.

Connections between the exterior ends of the kovar lead-ins and the voltage divider were made by crimping onto the lead-ins small nickel sleeves to which leads of 70 mil solder wire had previously been fused. Solder was used because a large diameter of wire was needed to guard against corona. It was considered unwise to try to join a heavy rod of any stronger material to the glass-supported lead-in wires for fear of doing damage to the seals.

After all electrical connections had been made, the voltage divider and the underside of the base flange were potted with white ceresin wax as a further protection against corona and surface leakage. This was done by melting the ceresin and bringing it to a temperature of about 100°C. Just before pouring, the area to be covered with ceresin was heated with a hair drier, in order to evaporate water and improve the surface contact with the

The soldering of the seals described above was performed by Dr. Dutting. Two hanson burners were played upon the base flange until it was heated to the melting point of solder. Thereafter the finned cylinds were dropped in one at a time. The area in the immediate vicinity of the cylinds just inserted was heated with a hanson burner as soldering said was applied. By puddling the solder in contact with the cover it was easy to wet the flange evenly. After the second attempt, using this procedure, all seals were found to be vacuum-tight.

Connections between the exterior ends of the cover lead-ins and the voltage divider were made by bringing onto the lead-ins small nickel sleeves to which leads of 70 mil solder wire had previously been fused. Solder was used because a large diameter of wire was needed to cause against screws. It was considered unsafe to try to join a heavy end of any stronger material to the piece-supported lead-in wires for fear of doing damage to the seals.

After all electrical connections had been made, the voltage divider and the underside of the base flange were potted with white ceresin wax as a further protective against corona and surface leakage. This was done by melting the ceresin and bringing it to a temperature of about 100°C. Just before pouring, the area to be covered with ceresin was heated with a hair drier, in order to evaporate water and improve the surface contact with the

cerèsin. After pouring the wax, the completely assembled tube base was left to stand for ten hours to permit a thorough hardening of the interior of the ceresin.

Processing

With the Allen tube certain procedures must be followed in obtaining and maintaining operation of the tube. The necessary conditions and activities will be described under the heading of "Processing".

The chronological steps in the processing are listed below:

1. Clean all parts of the tube.
2. Vacuum test the assembled tube shell and base plates.
3. Heat treat the dynodes.
4. Assemble the electrode structure and spot-weld internal leads to the mounted electrodes. This step should not require more than one hour exposure to air.
5. Replace the metal tube shell, mount the entire structure on the vacuum system and pump it down. Low pressure is maintained throughout the operating life of the tube with the possible exception of brief exposures to atmospheric pressure when changing windows. Generally the fore pump is left running at all times and the diffusion pump* used for an hour prior to and during operation.

* For capacities and data on pumps, see Appendix E.

Conclusion

This was a very short discussion concerning the [illegible] in operating and maintaining operations of the [illegible]. The necessary modifications and activities will be handled under the heading of "Procedures".

The chronological order is the [illegible] the listed below:

1. Clean all parts of the boiler.
2. Examine that the prescribed tube sheet and tube plates.
3. Start level the dynamo.
4. Alternate the electrical connections and right-hand internal leads to the monitor stations. This also small and complete [illegible] can hand equipment in air.
5. Replace the metal case [illegible], after the machine [illegible] on the vacuum system for [illegible] it down. The procedure is repeated [illegible] the operating life of the [illegible] with the possible exception of [illegible] equipment is [illegible] [illegible] [illegible]

The specific requirements of processing will be discussed in more detail in the following paragraphs.

Pressure Requirement:

The Allen tube may not be operated or maintained active unless the dynodes are in a low pressure medium. The lowest pressure required being that for actual operation of the tube, this demand will be discussed first. It is obvious that the electrons traversing the space from dynode to dynode must have a mean free path which considerably exceeds the inter-dynode distance. If this condition were not achieved, the electrons incident on a multiplying surface could lose so much energy in inelastic impacts that they would be unable to produce the required number of secondary electrons. Further, the ions formed in the tube would be comparable in number to the electrons. Such ions might migrate to the surface charge on the insulator or they might acquire considerable velocity and strike a dynode. Either action could result in the production of multiple pulses.

The exact computation of electron paths and velocities cannot be undertaken since the equipotential surfaces cannot be defined mathematically. However, a brief qualitative study of the electrode configuration indicates a probable path length of about 2 cm. per dynode. If uniform acceleration along this path is assumed and an inter-dynode voltage of 400 volts is specified, the average velocity of

The specific requirements of processing will be discussed in more detail in the following paragraphs.

Pressure requirement:

The Allen Cross may be of approach of [illegible] active unless the dynamic arc is a low pressure region. The lowest pressure required being that for actual operation of the tube, this pressure will be discussed since, it is evident that the electrons traversing the space from ground to dynamo must have a mean free path which considerably exceeds the inter-dynamo distance. If this condition were not achieved, the electrons incident on a multiplying surface would lose or mean energy if inelastic impacts that they would be able to produce the negative number of secondary electrons. Further, the loss formed in the tube would be comparable in number to the electrons. Such loss might depend on the surface charge on the insulator or they might require considerable velocity and strike a dynamo. Either action would result in the production of multiple pulses.

The exact computation of electron paths and velocities cannot be undertaken since the arbitrariness surface cannot be defined mathematically. However, a brief qualitative study of the electrons [illegible] indicated a probable path length of about 2 mm. per dynamo. If uniform acceleration along this path is assumed for an inter-dynamo voltage of 100 volts is specified, the average velocity of

the electron along the path is the same as that of an electron which has been accelerated through 100 volts (half of the final velocity being equivalent to a fourth of the final energy). The table below gives the necessary data for the computation of ion pairs formed under the given conditions.

Electron energy	Pressure, mm Hg	No. of ion pairs per meter
100 eV	10^{-4}	0.09
100 eV	10^{-5}	0.009
100 eV	10^{-6}	0.0009
100 eV	10^{-7}	0.00009

If the multiplier tube has an overall gain of one million, the multiplication at each of the twelve active surfaces is 3.16. Hence, for each million electrons which traverse the final 2 cm. path, one-third of this number travel the next to the last path, one-ninth of a million travel the second from the last path, etc. For a single electron at dynode 1 or 2, the total number of 2 cm. paths is then:

$$1{,}000{,}000 + 300{,}000 + 100{,}000 + 30{,}000 + 10{,}000 \ldots = 1{,}450{,}000$$

Since a high energy particle may produce four electrons at dynodes 1 or 2, the total path length per pulse is:

$$4 \times 1{,}450{,}000 \times .02 \times 10^{-3} = 116 \text{ kilometers.}$$

With this total path per pulse and the figures on ion pairs produced, the number of ions per pulse is computed as:

the electrons given this word is the same as 1001 of the electrons which are even (antisymmetric because all spins [half] of the final [electron] using antisymmetry in a [illegible] of the final energy). The data below give the experimental data for the [illegible] of the spin [illegible] under the given conditions.

Electron energy	Pressure, in [illegible]	[illegible]
300 ev	10^{-4}	0.00
150 ev	10^{-3}	0.001
300 ev	10^{-2}	0.0001
150 ev	10^{-1}	0.00000

If the multiplicative [illegible] is [illegible] [illegible] [illegible] in 3.16. However, the [illegible] multiplicative [illegible] the final [illegible] [illegible] [illegible]

Pressure in mm Hg	ion pairs per pulse
10^{-4}	10,440
10^{-5}	1,044
10^{-6}	104.4
10^{-7}	10.4

It is seen that at 10^{-6} mm of Hg the number of ions per electron is very small and this pressure is thus considered to be a workable operating pressure. It is here worth noting that all but 10% of the ions are produced in the vicinity of dynodes 12, 13, and 14. If these ions migrate to the nearest negative dynode they will clear the area in about 10^{-7} seconds. However, should they migrate to dynodes 1, 2, 3, or 4, they will arrive there in about 10^{-6} seconds and have sufficient energy to produce secondary emission. This latter occurrence must have a very small probability. Otherwise the tube would produce a continuous current.

In order to maintain the activity of the multiplying surfaces the pressure within the tube should be kept as low as is practicable. With the fore pump operating continuously, a pressure of 10^{-3} mm of Hg should be available. With the pump capacities used in this investigation, the tube pressure could be reduced to 10^{-5} mm of Hg about one hour after starting the diffusion pump. After a second hour the pressure could be expected to drop to 4 or 5 x 10^{-6} mm of Hg. Operation can be started when the pressure

Pressure in mm Hg	Ion pairs per point
10^{-4}	18,440
10^{-5}	1,044
10^{-6}	104.4
10^{-7}	10.4

It is seen that at 10^{-6} mm of Hg the number of ions per electron is very small and this pressure is thus considered to be a workable operating pressure. It is here worth noting that all but 10% of the ions are produced in the vicinity of dynodes 12, 13, and 14. If these ions migrate to the nearest negative dynode they will start the same in about 10^{-7} seconds. However, much they migrate to dynodes 1, 2, 3, or 4, they will arrive there in about 10^{-6} seconds and have sufficient energy to produce secondary emission. This latter occurrence must have a very small probability. Therefore the ions would produce a maximum current.

In order to maintain the activity of the multiplying surfaces the pressure within the tube should be kept as low as is practicable. With the fore pump operating continuously, a pressure of 10^{-5} mm of Hg should be available. With the same capacities used in this investigation, the tube pressure could be reduced to 10^{-5} mm of Hg about one hour after starting the diffusion pump. After a period when the pressure could be expected to start at a of 5 x 10^{-6} mm of Hg. Operation can be started when the pressure

drops to 2×10^{-5}. At higher pressures there seems to be an internal discharge starting when the voltage of dynodes 1 and 2 is about 5000 volts.

Heat Treatment:

The precise mechanism of secondary emission is not known primarily because the arrangement of metallic atoms, gasses, and impurities at the multiplying surfaces cannot be determined. Consequently, the operations for treating a multiplier surface are usually arrived at empirically. Dr. Allen's years of experience with beryllium surfaces resulted in the following treatment for annealed beryllium copper[1] whose beryllium content is nominally 2% by weight.

> "The cleaning procedure consists in polishing the electrodes either with fine abrasive paper or a small felt polishing wheel. After the polishing operation, the electrodes are cleaned with CCl_4.
>
> "We assemble the complete electrode structure and place it in a glass tube which is then evacuated. The electrodes are heated by means of an R.F. coil placed around the glass tube. The temperature of the electrodes is about 600 to 700°C (a dull red) and the treatment time about ten minutes. After the heat treatment the electrode system may be removed from the tube and mounted in the metal multiplier shell."

drops to 2×10^{-9}. It allows photoelectrons which cause the so be an internal discharge whenever when the intensity of incoming I and 2 in visual 8000 volts.

Dual Triggering:

The gaseous ionization of monitoring detectors in use cause primarily because the environment of mobilize atoms, gases, and impurities of the multiplying microwave because is unavoidable. Consequently, the operation the tolerance a multiplier devices may usually arrive at monitoring. The atomic phase of experiment with hydrogen microwave monitors in the Geiger-Muller tube [illegible] for monitor hydrogen oxygen[1] where hydrogen contain in monitors 02 to monitor.

The electric phenomena results in monitoring the microwave change with the discharge water on a small light pointing model. After the pointing operation, the electrons are stored with 0 Cl.

The operation the monitors electrode structure and phase in a close loop voltage in the water cell. The electrons are monitor by means of an air, will glow around the glass tube. The time penetrate of the microwave in water can be $20\mu^2$ in well cell but the increment time after high chamber. After the tube hydrogen the microwave system may be pointed into the tube and monitor in the metal multiplier chamber."

In this investigation two methods of heat treatment were attempted. The first to be tried was used on two assembled tubes, the second of which was heat treated twice. This first method was an attempt to heat the dynodes after the entire structure had been assembled and emplaced in the tube. The metal cover was replaced by a glass bell jar which was seated on an auxiliary flange. This system was then pumped down and the internal structure heated with an R.F. coil. After an hour of outgassing at incipient red heat, the temperature of the dynodes could be raised slowly to about 600°C and the heat treatment started. Because of the attenuation of the R.F. field by the steel base plate, only four dynodes could be heated at a time. The process was therefore completed in steps. Typically, dynodes 13, 12, 11 and 10 were heated simultaneously; then, 9, 8, 7 and 6 were heated; then 6, 5, 4 and 3; and finally 1 and 2. Note that there is an overlap on dynode 6. Actually, the four dynodes adjacent to those being heated were observed to be at incipient red heat and the actual overlap of the treatment is more than that indicated above. The heating of dynodes 1 and 2 separately is necessary because 2 shields 1 from the R.F. field unless the heating coil is canted about thirty degrees. Nickel shields* were removed during this heating process since they tended to form a closed loop around the top four dynodes.

* See Appendix F.

In this investigation the methods of some theoretical aerodynamics. The claim to be using only usual or the accepted views, the method of which was most familiar below. This views method can be defined to be: the dynamics after the initial disturbance but then calculated and analyzed in the frame. The model series the [illegible] by a plane wave for which was fixed on an oscillating flapper. This system was then applied with the [illegible] vertical stabilizer series as the [illegible]. After the base of [illegible] of [illegible] the [illegible] [illegible] of the dynamics which be valid simple to [illegible] and the [illegible] [illegible]. Because of the [illegible] flow of the [illegible], flight of the model have plenty, only [illegible] dynamics would be [illegible] of a flow. The [illegible] [illegible] [illegible] in [illegible]. Dimensionless, [illegible] 12, 13, 14 and 15 were [illegible] [illegible] [illegible] 4, 7 and 8 were [illegible] [illegible] 6, 9, 4 and 21 and [illegible] 2 and 8. [illegible] [illegible] be in [illegible] [illegible] 6. Generally, the [illegible] [illegible] [illegible]

The second method of heat treatment was used on the third and final tube. In this method, the dynodes were heated before assembly in the insulator plates. The treatment consists of baking all of the dynodes simultaneously in a quartz tube in a stream of hydrogen at atmospheric pressure. The heat is supplied by an external coaxial filament. Control of heat was obtained by supplying the filament from a variac. Temperature was measured directly with a thermocouple. This procedure permitted accurate control of both the temperature and the heating time. Excellent results were obtained when the dynodes were heated for 10 minutes at 650°C.

Some discussion of the advantages and disadvantages of the two heat treatments described seems in order. The first method more closely approximates the Allen treatment since the heating is done in a vacuum. It has the following advantages:

1. The structure is all assembled except for the shields and the exposure to air when mounting shields and replacing the bell jar by the metal shell is kept to a minimum. About twenty minutes' exposure is necessary.
2. The heat treatment could be repeated by merely removing the nickel shields and replacing the metal shell by the bell jar and auxiliary flange.
3. The dynodes are not touched or handled after the treatment.

The second method of heat treatment was used on the third and final tube. In this method, the dynamic were heated before assembly in the jacketed plates. The treatment consists of making all of the dynamic simultaneously in a quartz tube in a stream of hydrogen at atmospheric pressure. The heat is supplied by an external nickel filament. Control of heat was obtained by supplying the filament from a variac. Temperature was measured directly with a thermocouple. This procedure permitted because control of both the temperature and the heating time. Excellent results were obtained when the dynamic were heated for 10 minutes at 450°C.

Some discussion of the advantages and disadvantages of the one heat treatments described above in order. The first method were closely approximated the other treatment since the heating is done in a vacuum. It has the following advantages:

1. The structure is all recovered except for the shields and the exposure to air when mounting shields and replacing the cell jar by the metal shell is kept to a minimum. Great twenty minutes exposure is necessary.
2. The heat treatment could be repeated by merely removing the metal shields and replacing the metal shell by the cell jar and auxiliary flange.
3. The dynamic are not touched or handled after the treatment.

The disadvantages are numerous and will be listed as briefly as possible. They are:

1. During the outgassing and heating, the base plate, bell jar, insulator plates, and the flange and gaskets are warmed to about 80 to 100°C and there results some contamination of the dynodes by foreign substances which boil out at these temperatures.
2. The insulator plates become slightly coated with evaporated metal and the resistance between dynodes falls to the range 50 to 250 megohms. The more prolonged the heating, the lower the resistance becomes.
3. The heating is not uniform, nor is the time of heating subject to close control. Further, there is no precise way to measure the dynode temperature since the ordinary optical pyrometer does not operate at 600°C.
4. The use of an R.F. heater requires that the tube and its vacuum system or the R.F. heater be moved. This is inconvenient and time consuming. The shortest treatment achieved with this system took one working day.
5. Since contamination occurs, the advantage of reheating the dynodes is lost. It was observed during the second heating of the second

The disadvantages are numerous and will be stated as briefly as possible. They are:

1. During the outgassing and heating, the base plate, bell jar, insulator plates, and the flange and gasket are warmed to about 50 to 100°C and there results some contamination of the dynodes by foreign substances which boil out at these temperatures.

2. The insulator plates become slightly coated with evaporated metal and the resistance between dynodes fails to be more than 50 to 250 megohms. The more prolonged the heating, the lower the resistance becomes.

3. The heating is not uniform, nor is the time of heating subject to close control. Further, there is no precise way to measure the dynode temperature since the ordinary optical pyrometer does not operate at 100°C.

4. The use of an H.F. heater requires that the tube and its vacuum system or the H.F. heater be moved. This is inconvenient and also expensive. The shortest treatment achieved with this system took one working day.

5. Since contamination occurs, the operating of connecting the dynodes is lost. It may be observed during the second heating of the heater

tube that the dynode color when cold changed very considerably. At the same time, the resistance of the insulator plates between dynodes decreased by about half.

The advantages of the second heat treatment employed are as follows:

1. Control of temperature and heating time is possible.
2. Contamination is reduced to a minimum because of the action of the hydrogen and because no parts of the tube other than the dynodes are heated.
3. The equipment required is relatively simple and the vacuum system is not involved in the heating. This latter factor is important in preventing contamination of the diffusion pump oil.
4. The entire process requires about one and one-half hours as compared to one day for the other treatment.

The disadvantages of the second method are:

1. The treatment cannot be readily repeated since the entire electrode structure must be removed and disassembled in order to reheat the dynodes.
2. The length of time in which the dynodes are exposed to air after the treatment is longer

[illegible] that the dynamic [illegible] [illegible] [illegible] [illegible]. In the [illegible] case, the [illegible] [illegible] of the [illegible] [illegible] [illegible] [illegible] [illegible] [illegible].

The advantages of the second [illegible] [illegible] [illegible] [illegible] [illegible] [illegible] as follows:

1. Decrease of [illegible] and [illegible] [illegible] [illegible] [illegible].
2. Centralization is achieved in a [illegible] [illegible] of the [illegible] of the [illegible] [illegible] [illegible] [illegible] [illegible] [illegible] [illegible] [illegible] [illegible].
3. The [illegible] [illegible] [illegible] [illegible] [illegible] [illegible] [illegible] [illegible]

than the exposure with the first method.

3. The dynodes must be handled after treatment. This introduces a probability of contamination.

The results obtained with a tube heat-treated by the second method were far better than any obtained from tubes treated by the first method. The longer air exposure and the probability of contamination by handling of dynodes do not appear to detract from the ultimate performance. However, some improvement of the first method is possible. For example, the base plate and auxiliary flange can be heated during the vacuum test of the components. If this heating is continued long enough, the pressure in the system approaches a low stable value, indicating that the base plate and auxiliary flange are outgassed and that contaminating substances have probably been removed. An experiment was conducted on the base plate and auxiliary flange in which they were heated to about 100°C by passing steam through the cooling coils. After 12 hours of heating, the pressure in the system reached a stable value. Meanwhile, the upper surface of the bell jar had been cooled with ice and a yellow, greaselike residue collected thereon. This residue is believed to be mainly composed of Octoil from the diffusion pump. The yellow color is attributable to contamination of the oil by the impurities removed from

[illegible] the economy with the flying machine.

3. The foregoing work is included after the [illegible] work. This introduces a possibility of practicability.

The popular phrasing using a [illegible] is the [illegible] which [illegible] the active [illegible] [illegible] taken flying by the flight method. The lesser air pressure and the possibility of controlling by landing of dropping by jet engines in distance from the airport particularly. However, some investment of the first method is possible. For example, the [illegible] auxiliary flames can be higher having the [illegible] of the [illegible]. If this landing is continued [illegible], the pressure in the [illegible] [illegible] [illegible]

the base plate and flange. If, as is suspected, the base plate and flange are the principal sources of contamination, the process described above would almost certainly improve the results obtained when heat treating by the first method. However, unless temperature and time of heating can be better controlled in the first method, results comparable to those obtained with the hydrogen heating cannot be expected. Consequently, the second method is recommended.

the base plate and flange. If, as is suggested, the base plate and flange are the principal sources of contamination, the process described above would atomize essentially layers the possible contaminants that contain by the first method. Therefore, unless sufficient and time of heating can be better coordinated in the laboratory, results obtained by these methods cannot be expected. Consequently, the method should be reconsidered.

Conclusions and Recommendations Relating to the Construction and Processing of the Tube, Construction Phase.

In the course of this work three tubes were completed, of which only one, the third, proved successful as a particle detector. The reasons for the failure of the other two, while not completely known, can nevertheless be surmised from piecemeal data obtained in studying various aspects of the problem. Generally, they reduce to these:

(1) The presence of spurious signals resulting from leakage obscured whatever particle response there may have been.

(2) Contamination of the active surfaces reduced their efficiency.

(3) Failure to achieve optimum heat-treating conditions resulted in low electron multiplication.

(4) Insufficiently high vacuum may have given rise to excessively high ion currents in the tubes.

The matter of contamination and heat treatment has been well summarized in the preceding section. Now measures affecting the construction of the tube which were found necessary to produce a satisfactory detector will be reviewed.

(1) The design of the glass seals on the lead-in wires must be such that there is at least a

Conclusions and Recommendations Relative to the Construction and Operation of the Dam, Construction Phase.

In the course of this work three tubes were completed, of which only one, the third, proved successful as a particle detector. The reasons for the failure of the other two, while not completely known, were determined to be derived from placement data obtained in varying various aspects of the system. Generally, they reduce to these:

(1) The presence of spurious signals resulting from leakage measured whatever particle response there may have been.

(2) Contamination of the active surfaces reduced their efficiency.

(3) Failure to achieve optimum heat-treating conditions resulted in low electron multiplication.

(4) Insufficiently high voltage may have given rise to extensively high ion currents in the tubes.

The matter of contamination and heat treatment has been well considered in the preceding section. The measures affecting the construction of the tube which were found necessary to produce a satisfactory detector will be reviewed.

(1) The design of the tubes seals on the lead-in wires must be such that there is at least a

slightly elastic connection between the solder joint and the area of the glass-to-metal seal. If this is not provided in the design, the glass is strained during the cooling of the base flange after the soldering. Cracks in the glass and porous solder joints are likely. If a crack in the glass should develop, the best thing to do, of course, is to replace the eyelet seal with a new one. If this should prove impossible to do, the next best thing to try is to coat the region with a wax having suitable resistance and vapor pressure as well as sealing properties. Avoid using solvents in the vicinity of the crack for they were observed to carry more dirt into cracks than they ever removed.

(2) The bunsen burner method of soldering the eyelet seals in place, if skillfully carried out, is superior to the oven method for two reasons. The pudding and judicious application of flux in regions where the solder does not flow readily appears to be very necessary for a vacuum tight joint. Moreover, when this method is used, small crevices which appear as the solder sets and contracts may be individually

[illegible]

attended to. Some of the element of chance is removed.

(3) The hydrogen firing of Grade A Lavite is not recommended on the basis of the experience cited previously.

(4) Some difficulty was encountered in spot-welding electrical connections to the nichrome support wires. A substitute material for these wires should be sought. In connection with this, a tweezer spot welder is an essential tool for rapid assembling of the tube after heat treating it. Soft-soldering electrical connections to kovar is not recommended if it can be avoided. Where it is necessary, a very hot iron and acid flux are recommended. Scraping the oxide from the surface as the kovar is heated helps in tinning. A tin plating on the kovar eyelet is worth trying.

(5) The exterior dynode connections should be made using smooth sleeves and large diameter wire everywhere. This applies to the construction of the voltage divider as well. The entire high voltage system should then be potted as a further means of suppressing corona and leakage disturbances. The use of gyltol in contact with the high voltage leads is viewed with suspicion.

[illegible]

(3) The [illegible] [illegible] a [illegible] is [illegible] [illegible] on the [illegible] of the [illegible] [illegible] [illegible].

(4) [illegible] [illegible] [illegible] [illegible] [illegible] [illegible] [illegible] [illegible] [illegible]. [illegible] [illegible] [illegible] [illegible] [illegible] [illegible] [illegible] [illegible]

Conclusions and Recommendations, Part I, Processing Phase

After assembling, processing, and testing three tubes certain facts become self-evident and other matters are suspected of being important. The benefit of such experience as was obtained in this part of the investigation is given in the comment below:

1. The cleaning of all surfaces which will ultimately be within the multiplier tube shell is a most important factor in obtaining the desired multiplication. The contamination of dynodes which was observed in the first two assemblies tended to correlate with the measured multiplication. That is to say, the more contamination observed, the less the multiplication. In the final tube assembled, the dynodes were scoured with four abrasive papers of graduated fineness and the scoured dynodes were then dipped in various clean solvents and finally cleaned electrolytically. After heat treating these dynodes were handled with tweezers. It is quite probable that the improvement noted in multiplication of this set of dynodes is at least partly the result of this cleaning process.
2. The heat treatment of dynodes in hydrogen appears to produce excellent results. The disadvantages of this method have been previously discussed and it is here recommended that the following studies be conducted by anyone interested in producing this type of tube:
   (a) Design the electrode supporting structure and the

Conclusions and Recommendations, Part 1. Processing Phase

Arrow Geometric, processing, and Tonalite Lake also exhibit their further self-weighed and other methods are more useful or being successful. The quality of some photographs was affected in this case of the Conversations in view in the quality better.

1. The standard of all methods which will effectively be which low quality/low cost which is a very successful factor in obtaining the desired quality/cost. The methodologies or standards which was achieved in the final has successful because of correlation with the measured quality/cost. This is to say, the base measurements consumed, the time the quality/cost in the final was successful. The standard were achieved with their successful papers or processes. Further and the measure squared have also flown in accuracy across methods and finally always successfully. Arrow Geometric shows dynamic good location and measurements. It is quite probable that the improvement needed to make availability of this use to provide it as need (quality the quality of this standard comparing.

2. The base measurement of methods in dynamic designs in previous conditions quality. The distinctions of this method have been considerable difference and it is the same measurement base the influence measures in dynamic by means difference in processing this are not total (a) making the standard appropriately structure the the

electrical connections to the electrodes in such a manner that they may be more rapidly assembled and so that they may be readily disassembled for subsequent heat treatments. (b) Observe and identify the residue left in the quartz tube during the firing. If this residue could be eliminated, the assembled electrode structure could be heated as a unit and considerable time and danger of contamination eliminated from the process. (c) A study of the resultant multiplication as a function of temperature and time of heat treatment should be made.

3. A modification of the original design is suggested which is intended as a guide to some possible future work in this field. A sketch of the revised structure is shown in figure 8. The intention of this modification is to eliminate four of the principle problems encountered with the design used in this investigation. These four problems are:

    1. Difficulty of assembly and disassembly of the electrode structure.
    2. Difficulty of sealing in fourteen glass to kovar eyelets without having strain cracks or vacuum leaks.
    3. Elimination of corona.
    4. Difficulty in heat treating and handling the treated dynodes and the reduction of the exposure of these dynodes to air after treatment.

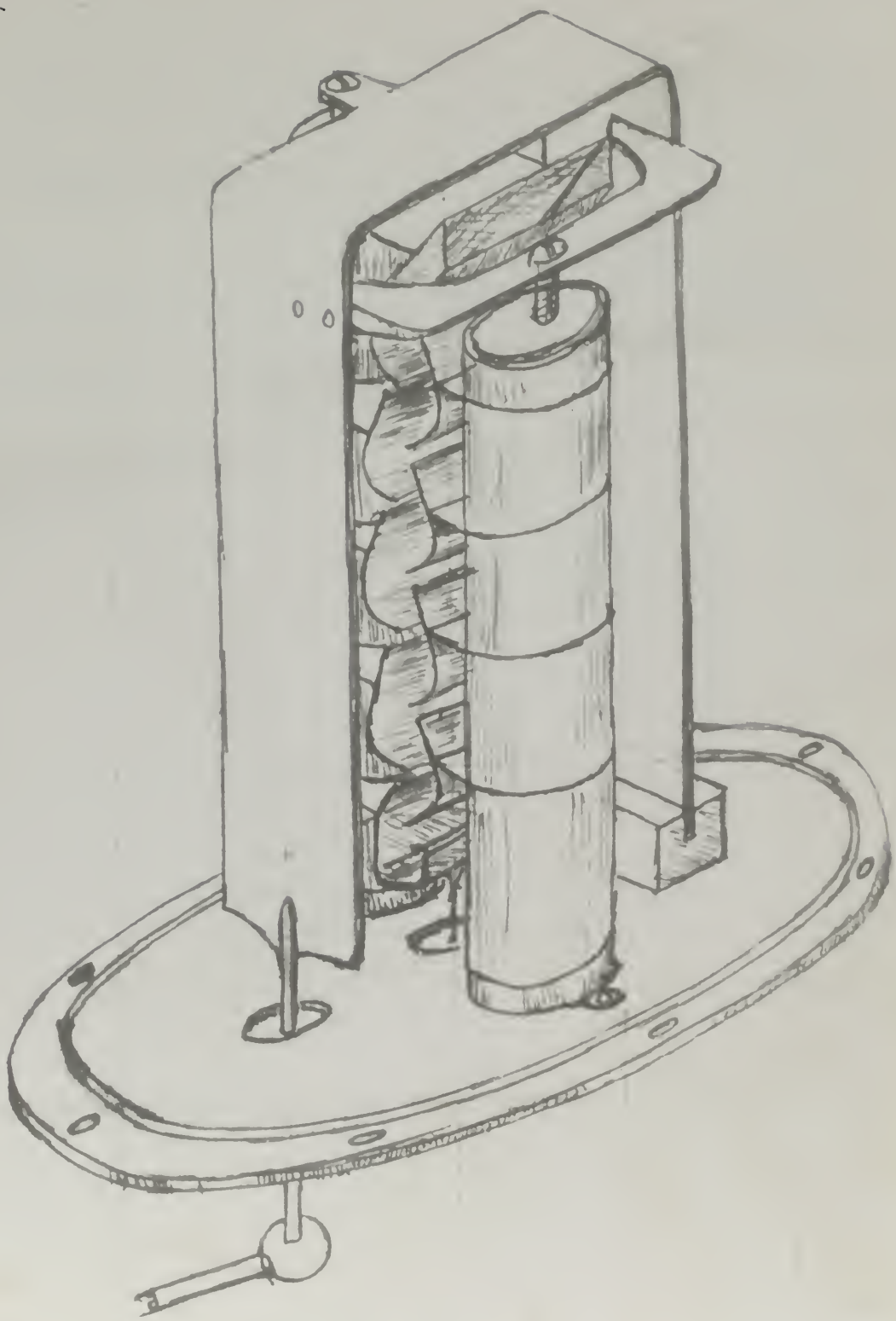

Fig. 5

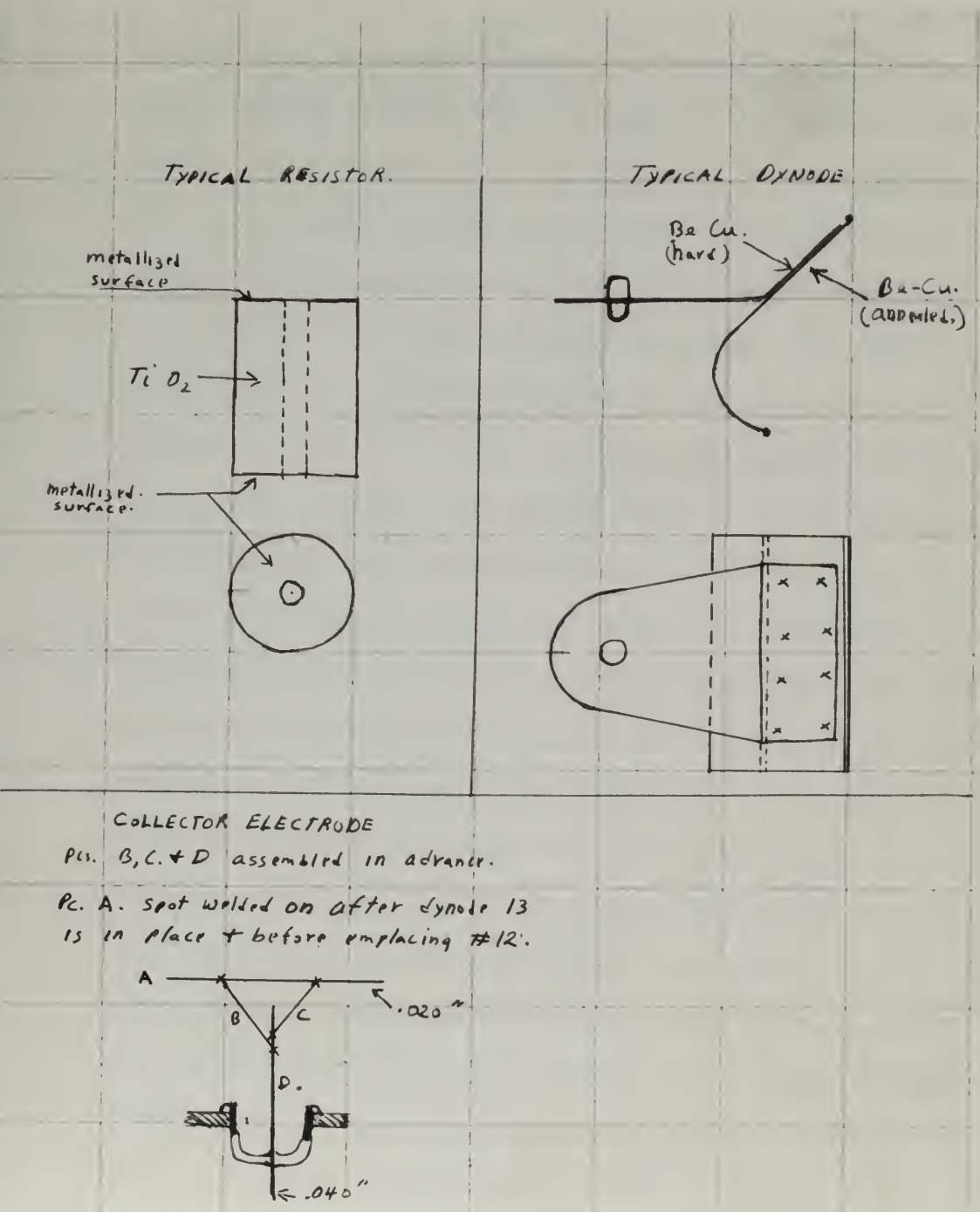
TYPICAL RESISTOR.
metallized surface
TiO_2
metallized surface.
TYPICAL DYNODE
Be Cu. (hard)
Be-Cu. (annealed.)
COLLECTOR ELECTRODE
Pcs. B, C. + D assembled in advance.
Pc. A. spot welded on after dynode 13 is in place + before emplacing #12.
A
B
C
D.
.020"
.040"

Fig. 5a.

The sketch of figure 5 shows the electrode structure, high voltage lead, and half of the voltage divider mounted on the base plate. The single high voltage lead becomes a flat rigid strap in the tube interior. This strap serves as a top support to the resistors of the voltage divider and durther is a negative shield which tends to collimate the electron beam and remove ions from the active area. The use of such a device would eliminate the necessity of insulator plates and the consequent probable troubles with surface charge on these plates. The resistors of the voltage divider can be obtained by extruding titanium dioxide in rods of about one inch outer diameter having a small central hole. The ends of these resistors are metallized to afford contacting surfaces. These resistors are fired in oxygen to control the resistivity. In the size shown, the resistance per unit could be almost any value less than 1000 megohms. If the resistors were aged in a vacuum the ultimate resistance should be quite constant.* The dynodes of this modification would have the same form as those used in this investigation. However, on the back of each dynode a metal strap is spot welded and the strap is bent in such a manner that

* Prof. R. G. Breckenridge, Insulation Research Laboratories, M.I.T. was consulted on the practicability of titanium dioxide resistors of this size and form. The data on resistors given above represent his opinions.

the surfaces away from the dynode are horizontal when the dynode is held in the correct position for a tube with a vertical axis. The end of this strap away from the dynode should have a semicircular form to conform to the shape of the resistors. In the center of the semi-circle a small dowel pin or tapered plug should be attached so that the pin or plug fits into the small hole in the interior of the resistors. This arrangement locks the strap and the dynode in position. The bracket and screw shown mounted on the high voltage strap serve to support and compress the resistor column and thus lock it into place. Any attempt to go into further detail would be futile without making the complete design.

The re-design proposed above solves the four problems mentioned in the following ways. Assembly and disassembly are accomplished by stacking or unstacking resistors and dynodes. The only locking piece is the top screw. There are no spot welded connections. There are but two glass to metal seals to consider. Their placement and size are not as critical as in the previous tubes. The single high voltage lead can be of large diameter, and this plus the simplicity of the system should eliminate corona. With this design, the time between heat treatment and final assembly of the tube can be reduced to 3 or 4 minutes. Furthermore, subsequent treatments will require a minimum of effort and time since there are no wires to clip or spot welds to make.

PART II

TESTING THE MULTIPLIER DETECTOR

Direct Multiplication Measurements

The processing of the Allen tube should result in an electron multiplication of about 4 per dynode. Since there are 12 stages of multiplication, this gives an overall gain of 17,000,000. Such gain cannot be measured directly because it is not possible to compare the normal input to the output. However, it is possible to measure the multiplication per dynode for many of the dynodes and thus check the results of the processing. This multiplication measurement is made by using a mercury arc to start photo emission at dynodes 1 or 2. Direct current of sufficient magnitude to permit accurate measurement with a sensitive galvanometer is then obtained at many of the higher numbered dynodes. The ratio of current measured at adjacent dynodes is directly related to the average multiplication of one of these dynodes. If, for instance, the electron current leaving dynode 9 via space toward dynode 10 is measured, and then the electron current leaving 10 for 11 via space is measured, the ratio of the latter current to the former is the multiplication at dynode 10. The fact that such ratios are seldom integral numbers indicates that the average multiplication is measured. The circuit diagrammed in Figure 6 is that used to measure the

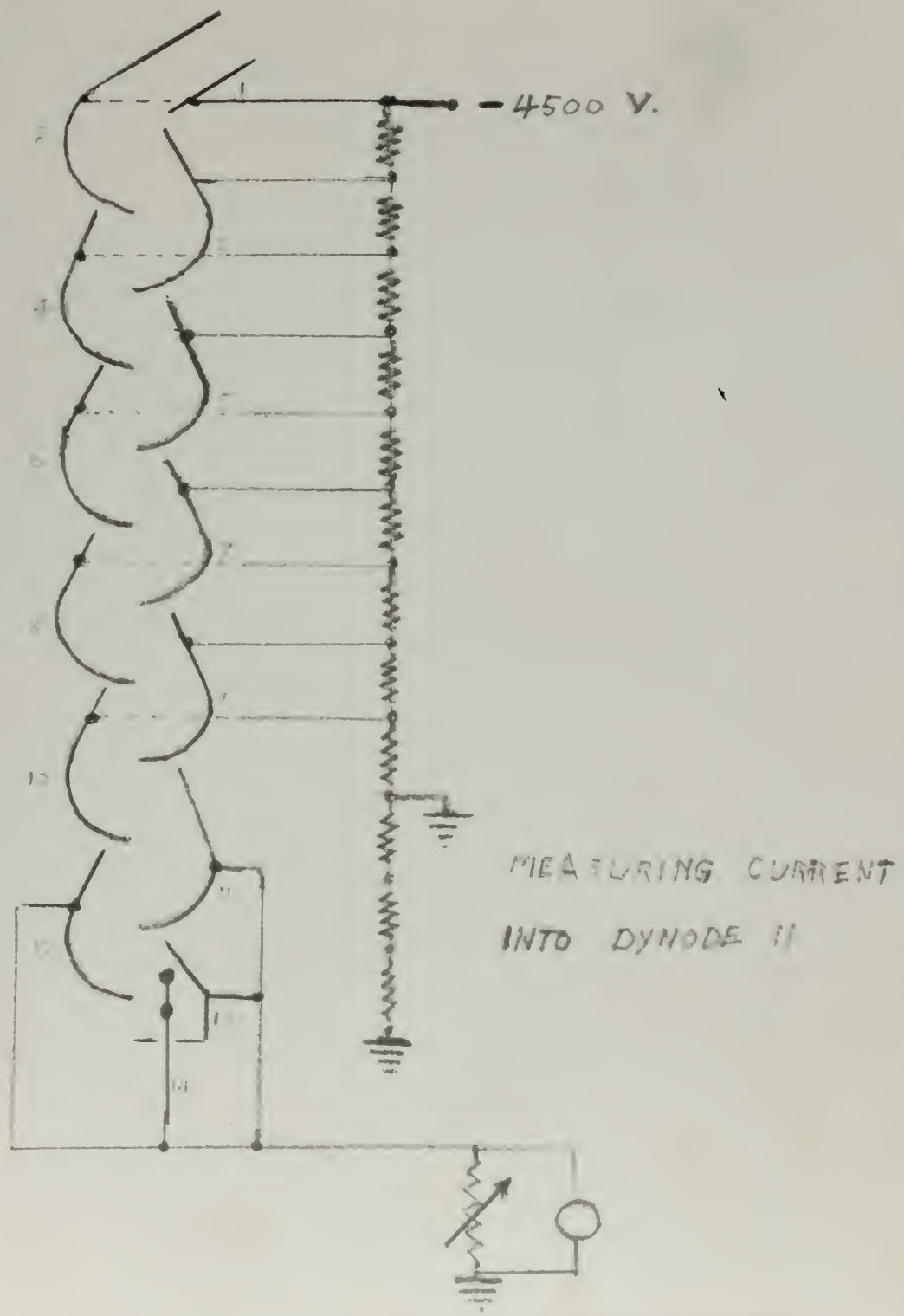

Fig. 6

electron current leaving dynode 10 for dynode 11. Note that dynodes of higher number than 11 are also used to collect this current. This is necessary because the electrons incident at 11 may cause secondary emission. In some instances it may be well to elevate the voltage at all the collecting electrodes to prevent some electrons from migrating to the grounded metal shield. For the currents and voltages actually used, this corrective measure did not change the current observably. Listed below are some typical measurements made using the method just described:

Dynode	Current	Multiplication
14	64.7 microamperes	0
13	39.0 "	1.66
12	17.5 "	2.23
11	7.8 "	2.25
10	3.47 "	2.71
9	1.28 "	2.725
8	0.49 "	2.60
7	0.157 "	3.13
6	0.05 "	3.13
5	0.016 "	3.11

A second method of measuring the multiplication in which the current measured is somewhat larger is shown in Figure 7. With this circuit a net current at the dynode

electron current leaving dynode 10 per square in. Note that dynodes of higher masses than 11 are also used to collect this current. This is necessary because the electrons incident at 11 may cause secondary emission. In some instances it may be well to elevate the voltage at all the collecting electrodes to prevent some electrons from migrating to the grounded metal shield. For the currents and voltages actually used, this corrective measure did not change the current appreciably. Listed below are some typical measurements made using the period just described:

Dynode	Current	Multiplication
14	54.7 microamperes	0
13	39.0 "	1.40
12	17.5 "	2.21
11	7.6 "	2.30
10	3.47 "	2.31
9	1.25 "	2.725
8	0.48 "	2.60
7	0.137 "	3.43
6	0.05 "	2.43
5	0.014 "	3.11

A second method of measuring our multiplication is which the current measured in ammeter larger is shown in Figure 7. With this circuit a set current of the dynode

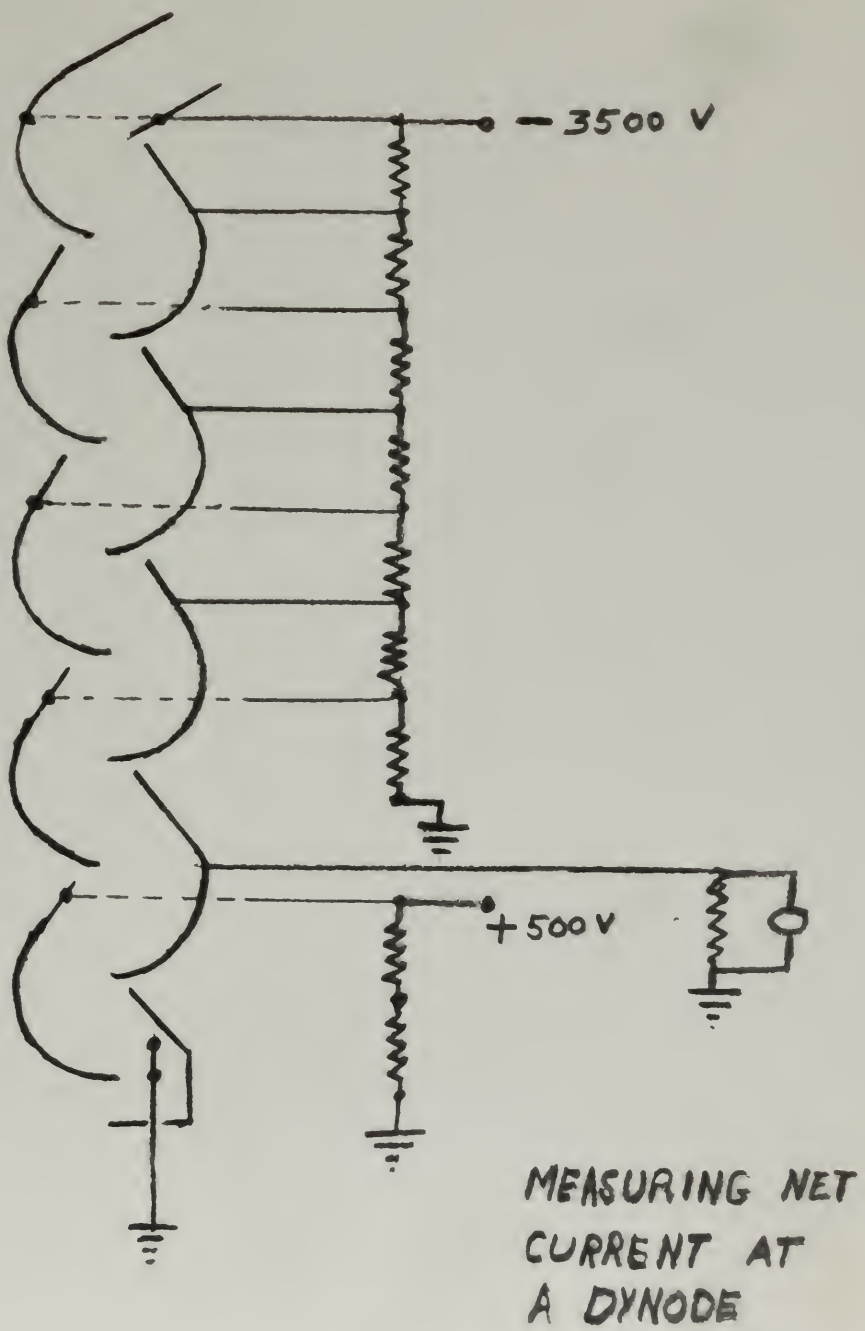

Fig. 7

connected to the shunt and galvanometer is measured. This net current is composed of the electron current flowing into the dynode and the electron current flowing away from the dynode. Since these two currents would flow through the galvanometer in opposite directions, and since the electron current flowing away from a dynode is larger than that flowing into it by the multiplication of the dynode, this net current will be larger than that measured by the previous method by a factor of the multiplication minus one. Some multiplications computed from the second method directly by ratios and those indicated by comparison of current measured by both methods are given in the following list.

Dynode	Net Current	Multiplication (ratio)	Multiplication (indicated)
13	40	----	2.02
12	28.8	1.39	2.64
11	14.1	2.04	2.81
10	6.3	2.24	2.81
9	3.05	2.06	2.38
8	1.18	2.58	3.40
7	0.49	2.4	3.97
6	0.178	2.75	3.74
5	0.062	2.87	3.69

The results listed here and previously were taken on the same tube under conditions which were identical except for the measuring circuit used. It is thus pertinent to

measurements on the phase and [illegible] is necessary. This can easily be accomplished if the electrode surface [illegible] the grounds and the electrode surface [illegible] from the grounds. Since these two measures would [illegible] through the calibrator is [illegible], and since the electrode surface [illegible] [illegible] than that [illegible] is by the multiplication of the [illegible], this not surface will be larger than that measured by the previous method [illegible] a factor of the multiplication ratio [illegible]. [illegible] multiplication measures [illegible] method [illegible] [illegible] [illegible] [illegible] is [illegible] [illegible] [illegible] [illegible]

try to explain the disparity in the results. The most probable source of error in any of the measurements is leakage between dynodes, some of which will pass through the measuring circuit. If the leakage is considered to be constant at all measuring positions, the method of measurement which indicates the least multiplication must be the method which also has the larger percentage of leakage since the ratio is used in measurement. Hence, the second method evidently causes the measurement of more leakage than the first method. If this is so, the currents measured in the second method are too large. Consequently, the "indicated" multiplication is too large by the amount of the ratio of leakage in the second method to total current in the first method providing there is no leakage by the first method. However, this cannot be safely assumed. It can be shown that if the leakage remains a constant for a given method of measurement,

$$M = (M_3 + 1) - M_1/M_2$$

where M is the true multiplication and M_1, M_2, and M_3 are the multiplications by method one, by method two, and the indicated multiplication respectively. Hence, it is indicated that the true multiplication in the examples given is invariably less than the indicated multiplication since M_1 is always greater than M_2. The corrected figures are given below.

Dynode	Corrected Mult.
13	----
12	2.04
11	2.71
10	2.61
9	2.06
8	3.39
7	3.66
6	3.60
5	3.61

The results listed here seem to indicate that leakage is not a constant and that the results from method 1 are probably consistently on the conservative side. With the exception of dynodes 9 and 12 the results tend to the trend shown in the results obtained with method 1. It would be well to mention here that the leakage referred to is not the current which would be measured with voltage on the appropriate dynodes and with no source of electrons at dynodes 1 and 2. This current has already been eliminated from the measurements. The only indication that some form of leakage does exist is the discrepancy in the measurements by the different methods.

In the last tube assembled, the voltage divider and external lead-in wires were potted and it was not possible to make direct measurement of the multiplication. Fortunately, the output pulses obtained with alpha particles

Grade	Percentage Daily
13	----
12	7.[illegible]
11	5.71
10	4.[illegible]
9	3.[illegible]
8	1.[illegible]
7	3.[illegible]
6	3.[illegible]
5	2.[illegible]

The results listed here seem to indicate that Lessons in not a constant and that the results from Lesson 1 are probably consistently on the conservative side. Since the description of Grades 3 and 10 the results vary to the trend shown in the results obtained with Lesson 3. It would be well to mention here that the lessons referred to is not the current which would be measured with voltage on the appropriate grades and will be moved at positions of Grades 1 and 2. This current has already been eliminated from the measurements. The only indication that some form of leakage were called in the discrepancy in the measurements by the different methods.

In the last case considered, the voltage divider and external load-in wires were passed and it had not consistent to make direct measurement of the multiplication. Fortunately, the output pulses obtained with these particles

incident on dynodes 1 and 2 were sufficiently large so that a measurement of their magnitude was possible at the output of the pre-amplifier. When pulses were so observed and their magnitudes analyzed by the discriminator levels of a conventional scaler, it was determined that maximum observed pulses were 4.5 volts and the minimum observed pulses were 3.0 volts. By other measurements it was determined that the ratio of maximum to minimum amplitudes should be in the vicinity of three. Hence, it was apparent that the pre-amplifier was blocking. The blocking voltage agreed with computed limitations of this amplifier. Hence, it was estimated that the true maximum output pulses would have been 9 volts with the amplifier in the linear range. The gain of the pre-amplifier measured with 10^{-8} second pulses was determined to be 20. Consequently, the maximum output pulses at the collector electrode must have been 0.45 volts and the minimum pulses 0.15 volts. Since the total capacity of the collector electrode and the input stage of the amplifier is 18 uu fd. the maximum gain in terms of electrons per alpha particle is

$$CV/e = \frac{18 \times 10^{-12} \times 0.45}{1.6 \times 10^{-19}} = 5.05 \times 10^{7}$$

Thus the maximum overall gain is of the order of fifty million for alpha particles. The minimum gain is about 17 million and this gain should be associated with the emission of one or two electrons per alpha particle

Instead of expression 1 and 2 were critically issue as well a consideration of their importance and quantity of the output of the pre-amplifier. This point view on observed and their analysis analysis in the investigation length of 2 transistors) series, it was concluded that maximum channel noise was at which was the minimum observed value 1.0 volts. In final consideration it was concluded that the ratio of feedback to minimum noise should be in the vicinity of 10:1. Thus, it was apparent that the pre-amplifier was dominant. The bandwidth without taking into consideration of this amplifier. Hence, it was anticipated that the band maximum output pulse would have over 1 volts at the multivibrator in the timing system. The ratio of the pre-amplifier noise with 10^{-8} second pulse was determined to be 20. Consequently, the maximum output pulse at the multivibrator electrode must have that 0.25 volts, or the minimum pulse 0.12 volts. Since the input capacity of the multivibrator electrode and the input stage of the amplifier is 12 to 20, the maximum pulse is found to diminish the stage gaining to:

$$\text{gain} = \frac{12 \times 10^{-12} \; 0.25}{1.5 \times 10^{-12}} = 1.01 \times 10^{-1}$$

Thus the minimum channel noise is at the expense of very minimum gain of minimum sensitivity. The minimum pulse is about 12 milliamp and that gives enough to operate the multivibrator or one or two microseconds for stable operation

at dynode 2. Subsequent measurement on gamma radiation indicates that the minimum alpha gain is to be associated with single electron emission unless it can be shown that the maximum pulses from gamma rays result from electron pair emission.

When multiplication per dynode is computed from the above figures it is found to be 4 if single electrons per alpha particle are emitted, and 3.76 if two electrons per alpha particle are emitted. Thus the multiplication per dynode is known to within 6% even though the overall gain is known only in order of magnitude.

Circuitry for Testing the Allen Tube as a Particle Detector

Among the measurements which it was desired to make using the Allen tube as a particle detector were the following:

(1) A measurement of the background counting rate in the absence of a particle source.

(2) A determination of the overall gain of the multiplier-detector from a measurement of the average pulse size at the output of the detector when a source of alpha-particle of fairly homogeneous energies is brought to the detector window.

(3) A determination of the statistical variation in amplitude of the output pulses resulting from the detection of like particles.

(4) An approximate estimate of counting efficiency based on counts obtained from available calibrated sources.

In order to perform the above measurements it was necessary to have a suitable amplifier, discriminator, scaler, and mechanical counter. A description of the measurements will be deferred until the features of the electronic equipment used have been discussed.

The Amplifier

The amplifier used was designed and built specially for this application as an incidental project in the thesis. Its design involved the following considerations:

Circuitry for Testing the Alpha Tube as a Multiple Detector

Among the measurements which it was desired to make using the alpha tube as a particle detector were the following:

(1) A measurement of the background detection rate in the absence of a particle source.

(2) A determination of the overall gain of the multiplier-detector from a measurement of the average pulse size of the output of the detector when a source of alpha-particle or fairly homogeneous energies is present in the detector cluster.

(3) A determination of the statistical variation in amplitude of the output pulses resulting from the detection of live particles.

(4) An approximate estimate of detector efficiency based on events detected from artificial calibrated sources.

In order to perform the above measurements it was necessary to have a pulsed oscillator, [illegible], scaler, and mechanical counter. A description of the measurements will be deferred until the features of the electronic equipment have been discussed.

The Amplifier

The amplifier used was designed and built specially for this application as an incidental project in the thesis. Its design involves the following considerations.

1. Upper Cutoff Frequency.

It was easily proven that the limit of pulse resolution would be in the amplifier rather than in the electron multiplier if conventional amplifier design was used. In Appendix A, the collector electrode of the multiplier was shown to charge through 80% of its response to a particle detection in a period of 6×10^{-10} seconds. In Appendix C, on the other hand, a conventional voltage amplifier was shown to have a limited gain, if it was to preserve the rise time of an input pulse, given by

$$G = \frac{g_m}{C} \delta,$$

where

G is the maximum gain available.

gm is the amplifier tube transconductance.

C is the capacitance shunting the output of the tube.

δ is the rise time of the pulse.

When values typical of a 6AK5 were substituted in the above formula along with a rise time of 6×10^{-10} seconds, the maximum gain available was found to be less than unity. The limiting factor in pulse resolution was therefore seen to be the amplifier rather than the multiplier.

A more severe limitation of resolving time than would be presented by a fast amplifier, however, was that introduced by a scaling circuit. The fastest of these which was available commercially possessed a resolving time of 10^{-7} seconds, a hundred times that of the multiplier. While the development

1. Upper Detect Frequency.

It has easily proven that the limit of pulse resolution would be in the amplifier under that in the electron multiplier if conventional amplifier tubes are used. In Appendix A, the collector electrode of the multiplier was shown to change through 90% of its response to a particle detection in a period of $\delta = 10^{-10}$ seconds. In Appendix B, on the other hand, a conventional voltage amplifier was shown to have a limited gain, if it was to preserve the rise time of an input pulse, given by

$$G = \frac{G_m}{C}\delta,$$

where

G is the maximum gain available.

g_m is the amplifier tube transconductance.

C is the capacitance shunting the output of the tube.

δ is the rise time of the pulse.

When values typical of a duty were substituted in the above formula along with a rise time of $\delta = 10^{-10}$ seconds, the maximum gain available was found to be less than unity. The limiting factor in pulse resolution was therefore seen to be the amplifier rather than the multiplier.

A more severe limitation of resolving time that could be presented by a fast amplifier, however, was that interposed by a scaling circuit. The fastest of these which are readily commercially possessed a resolving time of 10^{-7} seconds, a hundred times that of the multiplier. While the development

of electronic devices capable of utilizing the very short resolving time of the multiplier was considered very worthwhile, it was also considered far too formidable an undertaking to be attempted as an incidental project to this thesis.

Accordingly, the resolving time of the scalar (10^{-7} seconds) was accepted as the overall limit and the amplifier was designed with this in mind. An upper cutoff frequency of about 10 megacycles per second was chosen as a design figure. In Appendix H, the optimum gain-per-stage for wide bandwidth was shown to be near 1.65. It was observed, however, that an overall gain of 10^4 could be achieved with a bandwidth of 11 megacycles per second by using a gain-per-stage of 5 and employing four-terminal network coupling between stages.

2. Lower Cutoff Frequency.

In view of the very sharp nature of the pulses to be amplified, it was felt that the lower cutoff frequency of the amplifier could be made quite high. A high lower cutoff frequency was desired, moreover, as insurance against low frequency pickup, microphonics and motorboating. Accordingly, an analysis of the effect of low frequency cutoff was made to determine just how high it could be made and still preserve the discrete character of a pulse.

The analysis, presented in Appendix C, suggested a point of view which elucidated the problem. This point of view

of electronic devices capable of utilizing the very short resolving time of the multiplier was considered very worthwhile, it was also considered via the [illegible] as [illegible] taking to be attempted to be [illegible] [illegible] to this theory.

Accordingly, the resolving time of the [illegible] (10^{-7} seconds) was assigned as the [illegible] [illegible] [illegible] was designed with this in mind. An upper [illegible] frequency of about 10 megacycles per second was [illegible] as a [illegible] figure. In Appendix B, the optimum gain-bandwidth for wide bandwidth was [illegible] to be about 1.[illegible]. It was [illegible], however, that an overall gain of 10^{4} could be achieved with a bandwidth of 11 megacycles [illegible] by using a gain-per-stage of 2 and employing four-[illegible] [illegible] [illegible] between stages.

2. Lower Cutoff Frequency.

In view of the very short [illegible] of the [illegible] to be amplified, it was felt that the lower cutoff frequency of the amplifier could be made quite high. A high [illegible] [illegible] frequency was desired, [illegible], as [illegible] [illegible] [illegible] [illegible], [illegible] and [illegible]. Accordingly, an analysis of the effect of the frequency [illegible] was made to determine just how high it could be made [illegible] [illegible] [illegible] the [illegible] character of a [illegible].

The analysis, [illegible] in Appendix C, [illegible] a point of view which [illegible] the problem. This point of view

will now be discussed. A single pulse which has been passed by a circuit which has both an upper and a lower cutoff frequency will have a waveform which is the result of the coherence, at the instant of the pulse, of all the frequency components of the pulse which are passed by the circuit. By the term coherence is meant the ordered phase relationship among the components which gives rise, at the instant of the pulse, to a net voltage summation rather than a more or less complete cancellation. The period of time from the instant of the pulse before the coherence of a band of frequencies is lost depends upon the ratio of the width of the band to the frequency at the middle of the band, and to the amount of amplitude variation that exists within the band of frequencies. A sharp amplitude variation lengthens the time required for the coherence to be lost. The frequencies in the region of a spectrum where the amplitude variation with frequency is rapid, then, are the frequencies which tend to give rise to oscillatory trailing edges when the higher frequencies are not passed.

It is convenient to define a frequency associated with the pulse width. Let the central frequency of a pulse be that frequency which has a half-period equal to the pulse width at the half-amplitude points of the pulse. It is generally true that the central frequency of a pulse lies at a point in the spectrum thereof about half-way between zero

will now be discussed. A single pulse which has been passed by a circuit which has been so shaped and a lower pulse frequency will have a waveform which is the result of the adherence, at the instant of the pulse, of all the frequency components of the pulse which are passed by the circuit. By the time adherence is meant the [illegible] among the components which gives rise, at the instant of the pulse, to a net voltage amplitude rather than a zero or less complete cancellation. The period of time from the instant of the pulse before the adherence of a band of frequencies is lost depends upon the ratio of the width of the band to the frequency at the middle of the band, and to the amount of amplitude variation that exists within the band of frequencies. A sharp amplitude variation lengthens the time required for the adherence to be lost. The frequencies in the region of a spectrum where the amplitude variation with frequency is rapid, then, are the frequencies which tend to give rise to oscillatory trailing waves when the signal frequencies are not passed.

It is convenient to define a frequency associated with the pulse width. Let the central frequency of a pulse be that frequency which has a half-period equal to the pulse width at the half-amplitude points of the pulse. It is generally true that the central frequency of a pulse lies at a point in the spectrum thereof about half-way between each

frequency and the region where the amplitude variation is greatest.

It may be said that, for a given relative bandwidth, the frequencies which lie between the central frequency of the pulse and twice this frequency contribute most to the destruction of the singleness of the pulses.

The frequencies below the central frequency, on the other hand, do not tend to produce oscillatory trailing edges for two reasons. First, they occupy a region in the spectrum where the amplitudes are nearly the same height; and second, for a band of given frequency spread, the relative bandwidth is greater in the low-frequency range than in the high frequency range. Accordingly, the low-frequency bands will lose their coherence in a smaller number of cycles, or part of a cycle. The components of a low-frequency band, moreover, are effective in minimizing the oscillatory trailing edges resulting from a high-frequency band because they have considerably larger amplitudes than the high-frequency components. The waveforms presented in Appendix C may be used to estimate the low-frequency requirements in the light of this discussion.

Treating the amplifier as a whole, and assuming that the central frequency of the input pulse lies below the upper cutoff frequency of the amplifier, it is apparent that

frequency and the region where the amplitude variation is greatest.

It may be said that, for a given relative amplitude, the frequencies which lie between the central frequency of the pulse and twice this frequency contribute most to the construction of the displacement of the pulses.

The frequencies below the central frequency, on the other hand, do not have to produce oscillatory trailing edges for the transmit. Thus, from energy a region in the spectrum where the amplitudes are nearly the same height and second, for a pulse of given frequency spread, the relative amplitude is greater in the low-frequency range than in the high frequency range. Correctly, the low-frequency band will have their separation in a smaller number of cycles, or part of a cycle. The presence of a low-frequency band, however, are effective in obtaining the oscillatory trailing edges resulting from a high-frequency band because they have considerably larger amplitudes than the high-frequency components. The waveforms presented in Appendix A may be used to estimate the low-frequency requirements in the light of this discussion.

Treating the amplitude as a whole, and assuming that the central frequency of the band pulse lies below the upper cutoff frequency of the amplifier, it is however that

the troublesome frequency band is present in the output from the amplifier. From the curves in Appendix C for the case where this is true, it can be estimated that the low frequency cutoff must be no higher than one-tenth of the central frequency of the pulse in order to preserve the singleness of the pulse. Assuming that the broadest pulse of interest is one microsecond wide at the half amplitude point, the central frequency becomes 500 kc and the lower cutoff frequency should be 50 kc.

3. Anticipated Input Signal.

The range of signal voltages which could be anticipated was computed on the basis of the following assumptions:

(1) A capacitance of 15 pf would exist at the multiplier collector electrode.

(2) Four electrons would be released from the first dynode in process of the original detection.

(3) The multiplication per stage within the multiplier would be in the range of 2.5 to 4.0.

Results of the calculation are:

Electron Multiplication per Stage	Collector Pulse Size
2.5	0.0026 volts
3.0	0.0196 "
3.5	0.145 "
4.0	0.937 "

The preamplifier was designed on the assumption that the output pulse from the multiplier would be less than 0.1 volt. It was felt that a simple inverter-cathode follower could easily be substituted for the pre-amplifier should the multiplier prove to have a larger output pulse than 0.1 volt.

The [illegible] frequency band is provided to the output from the amplifiers. Thus the course is [illegible] the case where this is true, it has to be assumed that the frequency which must be in phase then corresponds to the maximum frequency of the power in order to obtain the minimum amplitude in the phase. Assuming that the [illegible] of interest is now [illegible] this is of the [illegible] points, the [illegible] frequency response can be set up [illegible] which corresponds to 90 deg.

3. Distortion free signal.

The range of signal allowed which could be [illegible] was varied on the basis of the following assumptions:

(1) A signal-noise of 10 db would result in the amplifier saturation.

(2) Some distortion would be tolerated from the [illegible] phase in response of the [illegible] filter.

(3) The multiplication error which the phase-[illegible] would be in the order of 1% in [illegible] results of the [illegible] error

Maximum Multiplication Error	Maximum Phase Error
[illegible]	[illegible]
[illegible]	[illegible]
[illegible]	[illegible]
[illegible]	[illegible]

The [illegible] was measured in the [illegible] that the output which from the multiplier varies in [illegible] 111 volt. It was felt that a [illegible] [illegible] would result in [illegible] that the [illegible] multiplier gives an error a factor [illegible] [illegible] 1% [illegible].

4. Gain.

The uncertainly of the multiplication which might be achieved in the electron multiplier made necessary the provision for a wide range of gain adjustment in the amplifier. It was sought to achieve this gain adjustment without introducing blocking. To this end, a variable transconductance tube was used in one of the early stages with an adjustable bias. In addition to this, a number of stages were designed with means by which they could be degenerated.

5. Output Requirements.

The amplifier was designed to produce a positive pulse having an amplitude across 1000 ohms of at least 20 volts. This was accepted as a reasonable output for driving a scaling circuit or a synchroscope through a short length of coaxial line.

6. Additional Features.

A pulse amplitude discriminator was included for the purpose of measuring the statistics of the Multiplier Detector.

A means of achieving a somewhat logarithmic gain response was included to improve the detection efficiency of the system. It was achieved by making provision for replacing two of the sharp cutoff tubes which amplified negative pulses with remote cutoff tubes and by providing for degenerating two alternate stages which amplify positive pulses.

b. Value.

The usefulness of the multiplication algorithm is believed to be greatest in the classroom situation but because the practice for a time seems to pass unnoticed in the [illegible]. It was hoped to obtain data with which to [illegible] the [illegible] [illegible]. By this [illegible] [illegible] with an affordable value. In addition to this, a number of people were analyzed into order to [illegible] they could do [illegible].

c. Method Implications.

The solution was designed to produce a monitor which having an application program [illegible] or at least [illegible] data. This was attempted by a [illegible] system for solving a physical [illegible] to a [illegible] through a [illegible] of the data [illegible].

d. Additional Problems.

A [illegible] multiplication algorithm was written for the purpose of [illegible] the accuracy of the [illegible] [illegible].

A [illegible] of [illegible] a [illegible] [illegible] [illegible] [illegible] the [illegible] [illegible] [illegible] the system. It was [illegible] to [illegible] [illegible] [illegible] [illegible]

The amplifier circuits which were designed in accordance with the above considerations are shown in Dwgs. D-1039-A and D-1039-B in Appendix J. The preamplifier consists of three stages of voltage amplification coupled with four-terminal networks which are not original in this design. It has a cathode follower output matched to a 93 ohm line. The measured steady state voltage gain of the preamplifier is plotted in Fig. 8. This data was taken using a General Radio 605B Signal Generator with the output connection described in Appendix K, and a General Radio 1800A Vacuum Tube Voltmeter at a matched termination to the output cable of the preamplifier.

The amplifier consists of an inverter stage, a gain control stage, four stages capable of being individually degenerated by opening toggle switches, an amplitude discriminator, a driver tube, and a cathode follower. Ordinary RC coupling was employed in the amplifier, but space was left for four-terminal network elements should they prove necessary to decrease the resolving time. The amplifier provides a 93 ohm termination at its input, and is designed to amplifier sharp (0.1 micro-seconds) positive pulses of not more than two volts amplitude. Its output is also a positive pulse limited to

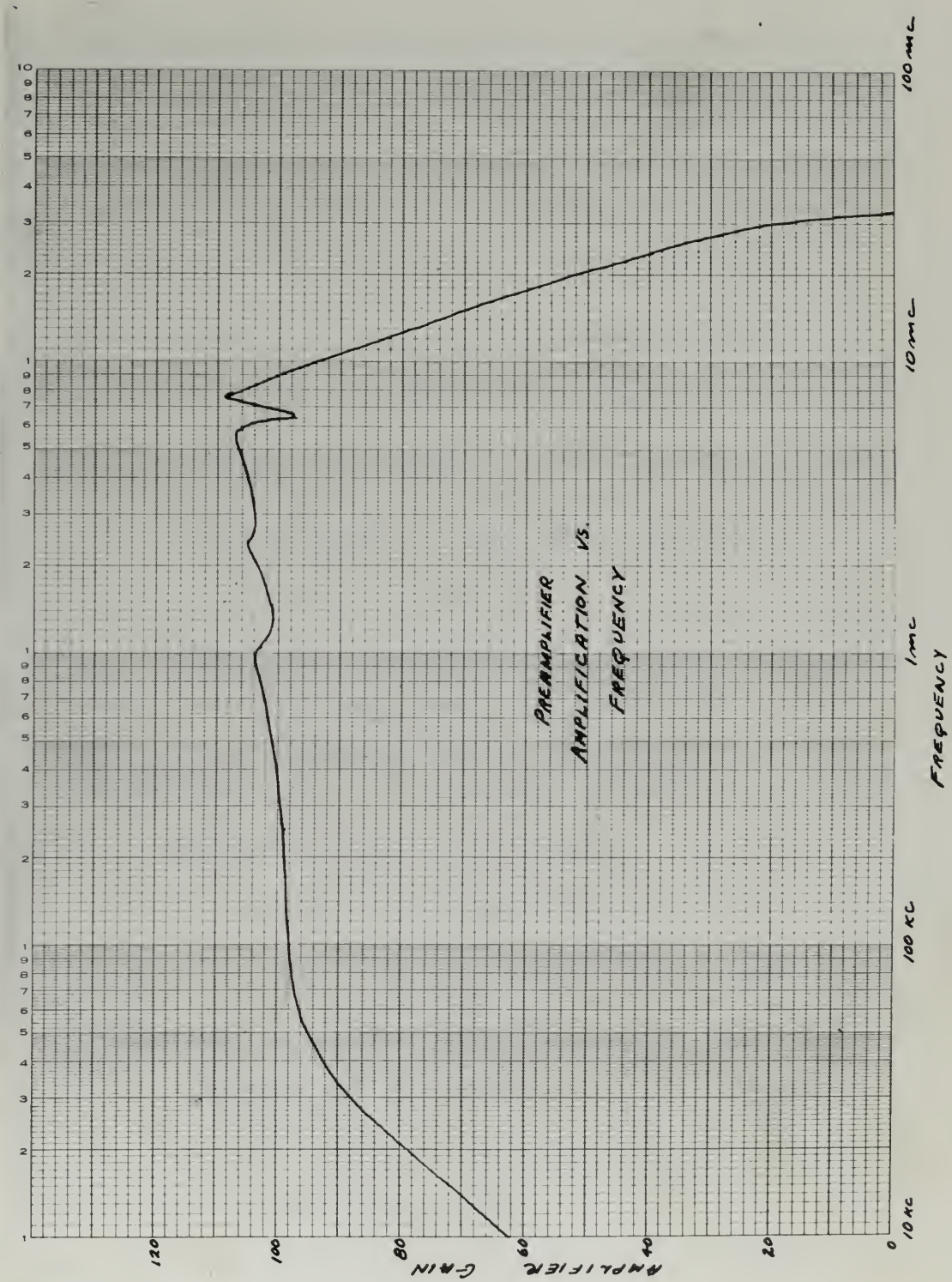
PREAMPLIFIER
AMPLIFICATION VS.
FREQUENCY
AMPLIFIER GAIN
120
100
80
60
40
20
0
10 KC
100 KC
1 MC
10 MC
100 MC
FREQUENCY

Fig. 8

20 volts for linear amplification, and to 50 volts under conditions of saturation. The output impedance is 80 Ω , but the amplifier must work into an impedance greater than 5000 ohms. The output connection has a d.c. voltage to ground of about 100 volts.

The power requirements of the amplifiers are as follows:

Pre-amplifier

Direct Current - +200 volts, 54 milliamperes to ground.

Filament - 6.3 volts a.c., 1 amperes, one side grounded.

Amplifier

Direct Current + 250 volts, 160 milliamperes to ground and -150 volts 2 ma to ground.

Filament 6.3 volts a.c., 3 amperes, one side grounded and 6.3 volts a.c., 0.6 amperes center tapped and carried at d.c. voltage of output connection.

so varied for linear amplification, one to 20 volts under modulation of amplification. The output impedance is 50 Ω, but the multiplier must used half as large-sized transformer than 1000 watts. The output accumulator has a 4.4v. voltage to ground of about 200 volts.

The power requirements of the multiplier are as follows:

Pre-multiplier

Plate current - 400 volts, 25 milli-amperes to ground.

Filament - 6.3 volts a.c., 3 amperes, one side grounded.

Multiplier

Plate current - 2 kv. volts, 100 milli-amperes to ground and -100 volts 2 ma to ground.

Filament - 6.3 volts a.c., 3 amperes, one side grounded and 5.3 volts d.c., 0.5 amperes another filament one side to d.c. voltage of minus accumulation.

The complete amplifier system was tested for pulse response using a gas tube pulser* whose output was attenuated by a 75 ohm "toggle switch attenuator"+. The attenuator output was terminated at the pre-amplifier, and passed through a 1N34 crystal diode to the input stage grid. The use of the crystal was to cause the charge on the grid of the first tube to leak off with the same time constant under these test conditions that it would have when the amplifier was directly connected to the multiplier collector electrode.

The output pulse from the amplifier was observed on a P5 synchroscope. The gain of the amplifier was determined from the known amplitude of the pulser output, the known calibration of the attenuator and the observed pulse height on the synchroscope. A plot of the observed overall amplifier gain is presented in Figs. 9 and 10.

When the last Allen tube was tested it was found that the multiplication surpassed the original estimates by a sufficient amount to cause blocking of the pre-amplifier.

*This pulser, designed by J. A. Dare, delivers negative or positive pulses having rise times of less than 0.01 micro-seconds at trigger repetition rates up to 1000 cycles per second.

+Designed by Yardley Beers of the M.I.T. Radiation Laboratory.

The complete amplifier system was tested for pulse response using a [illegible] pulser* [illegible] established by a [illegible] "[illegible] scintillator"†. The scintillator output was [illegible] at the pre-amplifier, and passed through a [illegible] crystal diode on the input stage grid. The use of the crystal was to shunt the charge on the grid of the first tube in [illegible] with the same time constant under which that condition that it would have [illegible] the amplifier was directly connected to the multiplier anode-cathode circuit.

The output pulse from the amplifier was observed on a [illegible] oscilloscope. The gain of the amplifier was determined from the known amplitude of the pulser output, the known [illegible] of the scintillator and the observed pulse height on the oscilloscope. A list of the observed overall amplifier gain is presented in Figs. [illegible] and [illegible].

When the [illegible] was tested it was found that the multiplication [illegible] the [illegible] saturation by a sufficient amount to [illegible] of the pre-amplifier.

*This pulser, designed by [illegible], [illegible] negative or positive pulses [illegible] of [illegible] micro-seconds at [illegible] repetition rates up to [illegible] cycles per second.

†Designed by [illegible] of the [illegible] Radiation Laboratory.

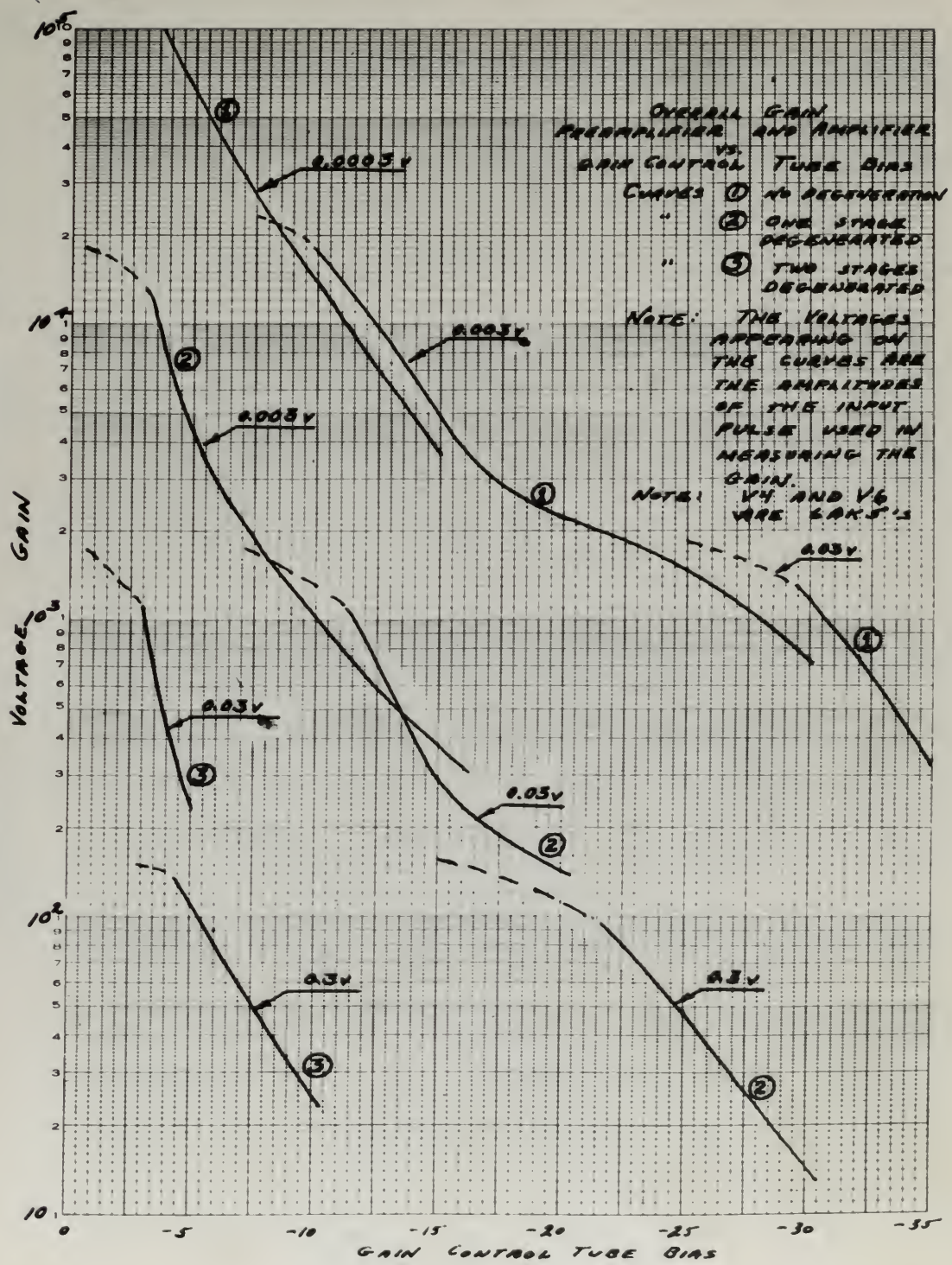
OVERALL GAIN
PREAMPLIFIER AND AMPLIFIER
VS.
GAIN CONTROL TUBE BIAS
CURVES ① NO DEGENERATION
" ② ONE STAGE DEGENERATED
" ③ TWO STAGES DEGENERATED
NOTE: THE VOLTAGES APPEARING ON THE CURVES ARE THE AMPLITUDES OF THE INPUT PULSE USED IN MEASURING THE GAIN.
NOTE: V4 AND V6 ARE 6AK5'S
0.0003 v
0.003 v
0.008 v
0.03 v
0.05 v
0.3 v
0.8 v
GAIN
VOLTAGE
GAIN CONTROL TUBE BIAS
0
-5
-10
-15
-20
-25
-30
-35

Fig. 9.

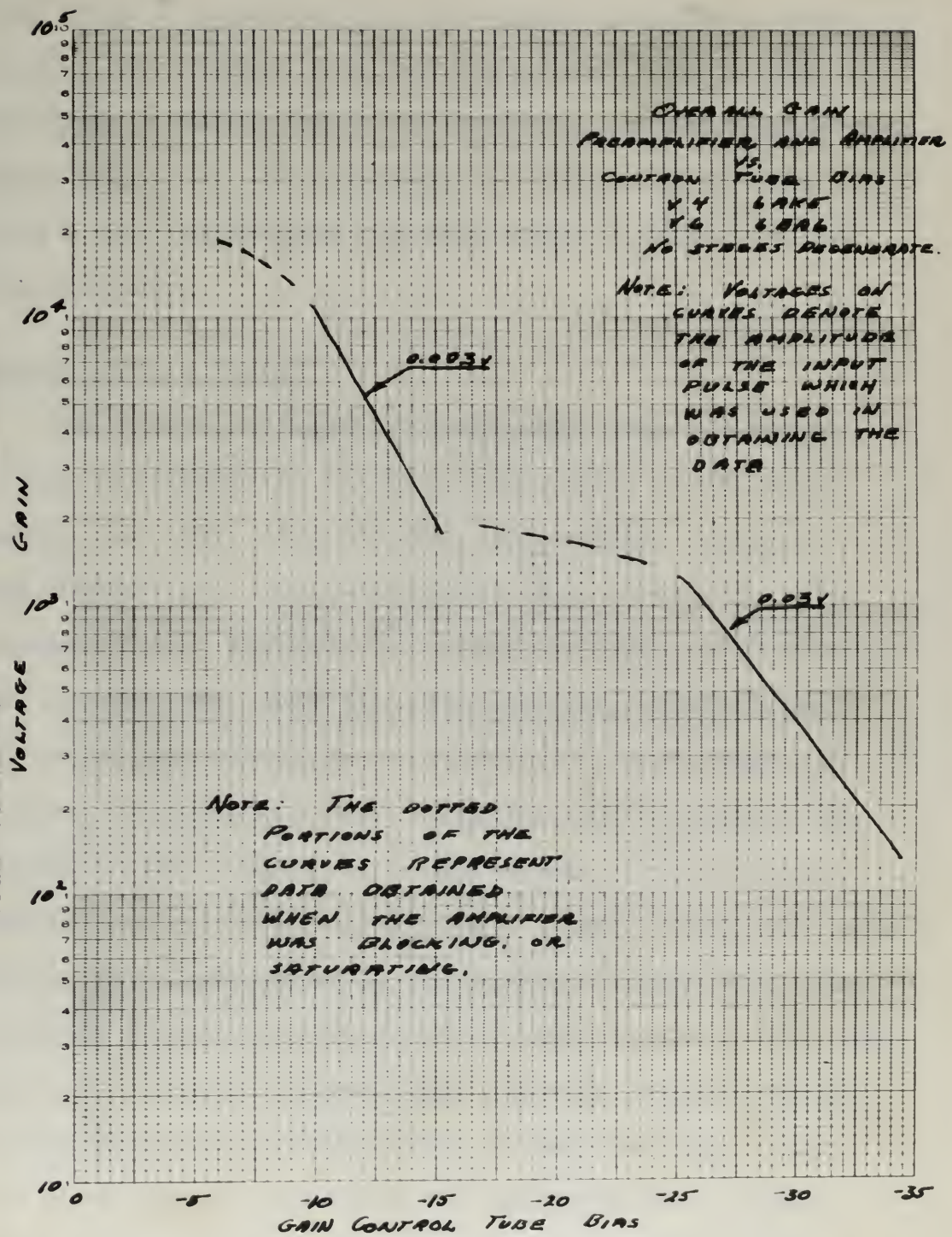
OVERALL GAIN
PREAMPLIFIER AND AMPLIFIER
VS.
CONTROL TUBE BIAS
V4 6AK5
V6 6AR6
NO STAGES DEGENERATE.
NOTE: VOLTAGES ON CURVES DENOTE THE AMPLITUDE OF THE INPUT PULSE WHICH WAS USED IN OBTAINING THE DATA
0.003V
0.03V
NOTE: THE DOTTED PORTIONS OF THE CURVES REPRESENT DATA OBTAINED WHEN THE AMPLIFIER WAS BLOCKING OR SATURATING.
GAIN
VOLTAGE
10^5
10^4
10^3
10^2
10^1
0
-5
-10
-15
-20
-25
-30
-35
GAIN CONTROL TUBE BIAS

Fig. 10

As a quick remedy to the situation, the resistance R1, Dwg. 1039-A, Appendix J, was replaced by a 50 ohm resistor. The overall gain was estimated to have been reduced by a factor of 10 by observing that the maximum output pulses of the preamplifier after modification were about 1 volt where they had been about 4 volts and had been blocking.

Dynode Voltage Supply

The dynode voltages were obtained from a voltage divider consisting of a series connection of 12 three megohm, one watt, Allen Bradley composition resistors each shunted by a 0.01 microfarad mica condenser. The condensers were included to prevent exterior disturbances from entering the tube via the lead-ins, and to reduce the resistance noise characteristic of composition resistors. The dynodes were connected, in the manner described in the section on Construction, to the voltage divider points so that dynodes no. 1 and 2* and the nickel shields were maintained at the supply voltage while the remaining dynodes in the order of their numbers were maintained at voltages successively reduced from the supply voltage in steps of one-twelfth of this voltage. The 14th electrode or collector was connected to a common ground through the grid return resistor of the preamplifier input stage. The voltage to the voltage divider

* Refer to Dwg. D-1025-V, Appendix G, for dynode numbering.

is a value remote to the circuits, the relations of, two. 1039-c, currently 7, was figured up a 20 ohm resistor. The overall gain was calculated to have been reduced by a factor of 10 by connecting into the medium output points of the preamplifier-filter combination were where I felt where that far more than that a value had not been disturbed.

Grounds Failure Detector

The circuits without were created from a voltage divider consisting of a series connection of 12 equal resistors, one end, plus further connection resistors was shunted by a 1.0 microfarad pole condenser. The connections were tested to prevent leakage circuitrons from entering the base via the load-line, and to ensure the resistance ratio characteristic of measurements remained. The circuits were connected in the manner described in the section on circuitry. In the various circuit points on that circuits so, 1 and 2? and the normal voltage variations of the battery motors while the remaining circuits in the order of their measure were maintained as voltages successfully because they are equally valuable in ways of measurements of all values. The high electrode or collector was connected as a ground through through the grid meter resistor of the amplifier input circuit. The resistor in the voltage divider

= Larger to the. 1-1000-f, currently 2, for first circuit measurements.

was obtained from a variable high-voltage power supply through a shielded cable rated at 10,000 volts. The power supply was rated at 10 milliamperes at 5000 volts. Its voltage was adjustable up to 7000 volts for the current drawn in this application.

Particle Counting

The ultimate test of the electron multiplier detector would be an accurate measurement of its efficiency in counting alpha, beta, and gamma radiation. However, it was found that this measurement could not be made in this investigation because the determination of the active area which defines the solid angle of the detector could not be determined by any simple experiments. Consequently, the data given in figures 11 through 17 is to be considered as typical data rather than calibration data.

In figure 11 a plot is shown of the variation in background count with power voltage. To obtain the inter-dynode voltage, power voltage can be divided by 12. The background count is satisfactorily low at all practical power voltages.

Figure 12 shows a plot of particles counted from a polonium source when power voltage is varied. A brief consideration of figures 11 and 12 together indicates that a power voltage of 5500 gives optimum counting conditions for strong sources of radiation, and a power voltage near 3500 is appropriate for weak sources. If an appropriate vertical scale were used, the curve of figure 12 could be considered a relative efficiency curve for alpha particle counting.

Data for figure 13 was obtained by using discriminator bias to analyze pulse magnitudes. This is essentially a curve showing the variation in overall gain with power

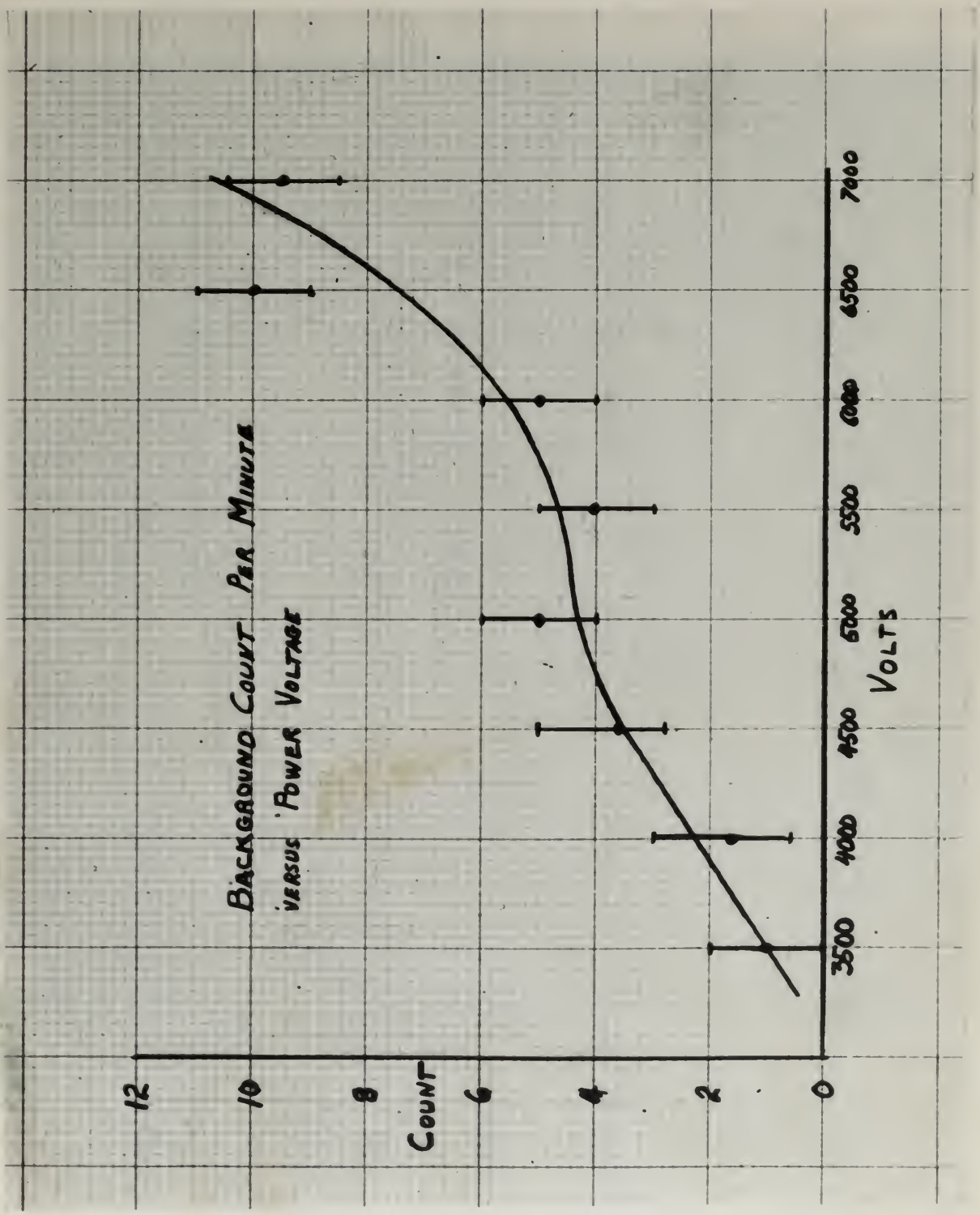
BACKGROUND COUNT PER MINUTE
VERSUS POWER VOLTAGE
COUNT
12
10
8
6
4
2
0
3500
4000
4500
5000
5500
6000
6500
7000
VOLTS

Fig. 11

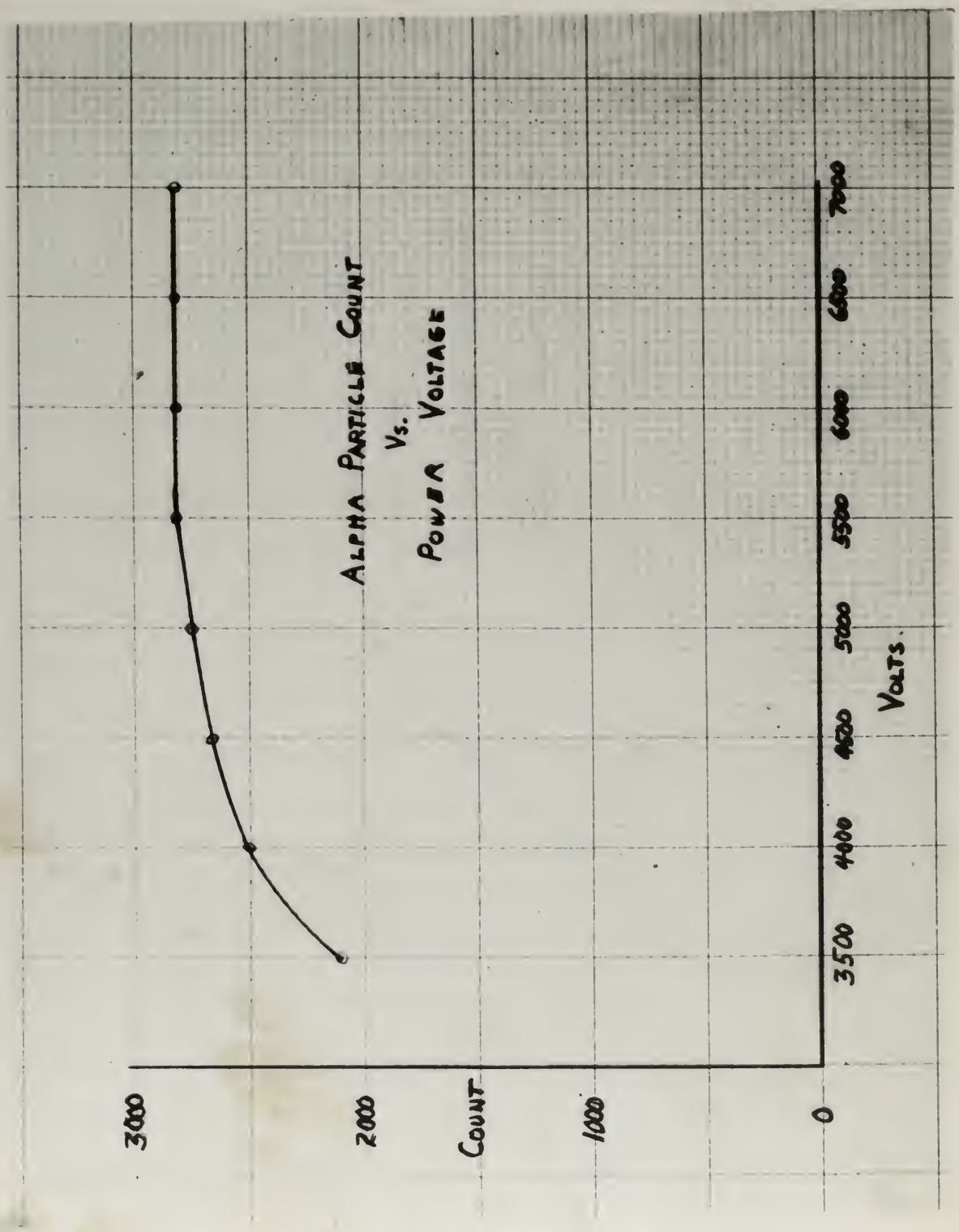
ALPHA PARTICLE COUNT
VS.
POWER VOLTAGE
3000
2000
COUNT
1000
0
3500
4000
4500
5000
5500
6000
6500
7000
VOLTS.

Fig. 12

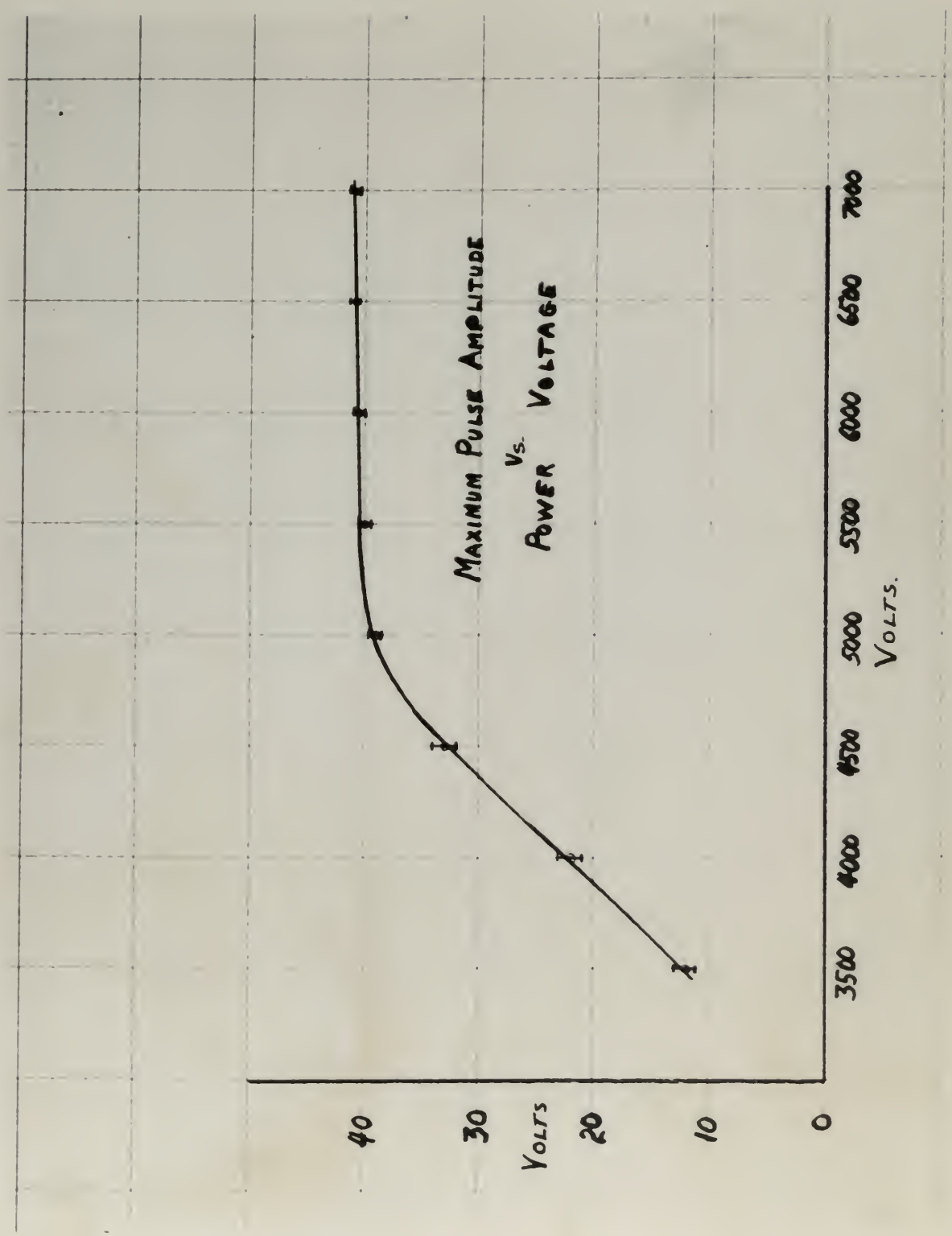
MAXIMUM PULSE AMPLITUDE
VS.
POWER VOLTAGE
VOLTS
40
30
20
10
0
3500
4000
4500
5000
5500
6000
6500
7000
VOLTS.

Fig. 13

voltage. It is noteworthy that the total count and dark current curves have characteristics similar to the curve of figure 13 up to 5500 volts. Above 5500 the increase in background count may very well be the result of corona in exterior leads or field emission within the tube.

The curve of figure 14 shows the effect of amplifier gain on counting ability. The several "plateaus" noted indicate that the majority of the pulses are of about the same size. The stepped down plateaus further indicate that some variation occurs in the emission of electrons in the first three or four dynodes. This form of curve is expected in multiplier type tubes.

In obtaining data for figure 15 the discriminator bias of the scaler was used to analyze pulse sizes. The curve shown could also be considered as a pulse magnitude distribution curve. Here again the variation in the emission at one or more of the first four dynodes is evidenced by the several steps along the negative slope of the curve.

Figures 16 and 17 are similar to 14 and 15 respectively, except that a gamma source was used to produce the pulses. The more regular distribution of pulse sizes observed in figure 17 is attributed to the fact that gamma rays may reach any of the 13 active dynodes and produce an electron. This fact, plus the statistical variation expected in multiplication at any surface tends to disguise any steps such as were observed with the alpha particle source.

An adequate source of beta radiation was not available

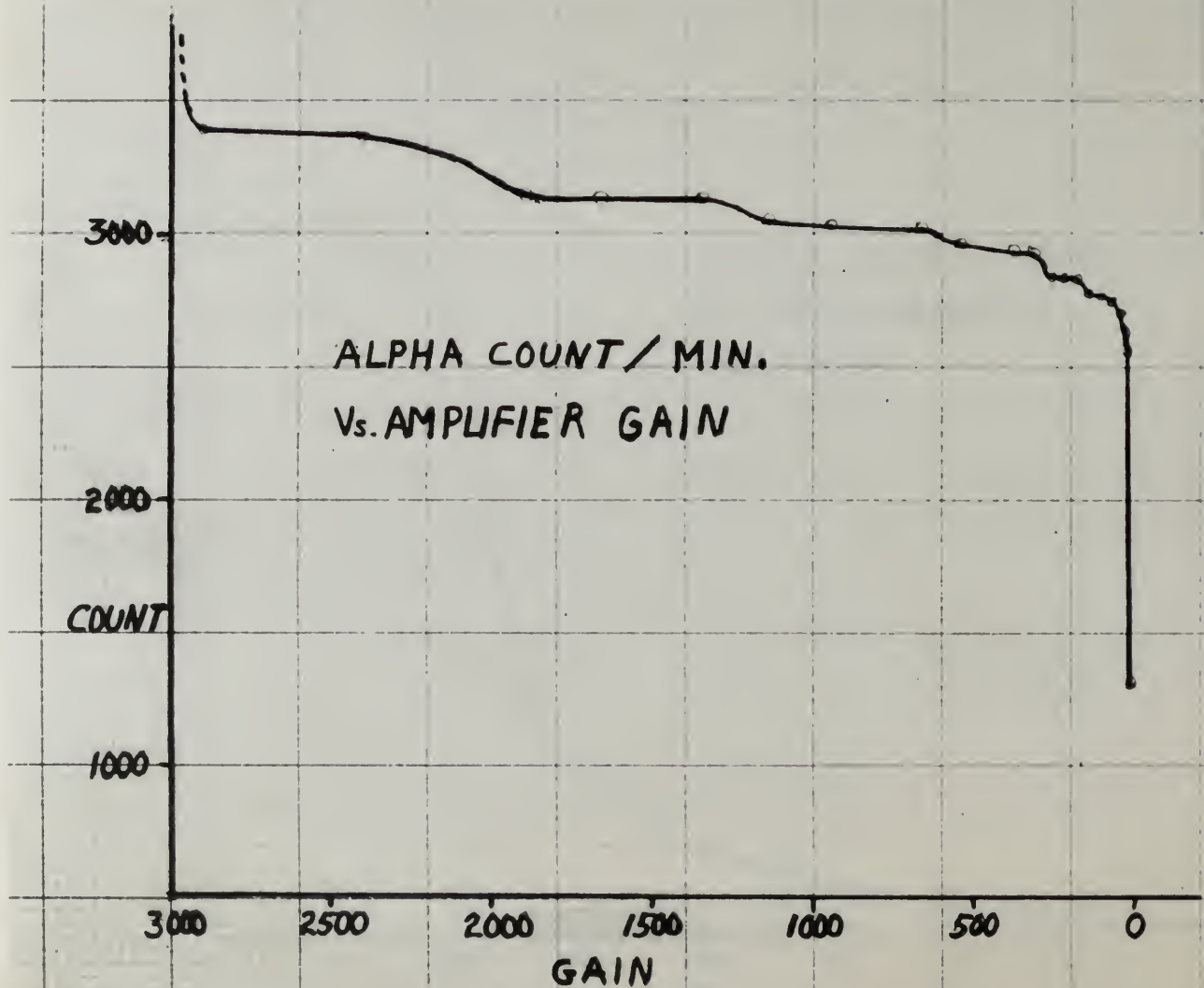
ALPHA COUNT / MIN.
Vs. AMPLIFIER GAIN
3000
2000
COUNT
1000
3000
2500
2000
1500
1000
500
0
GAIN

Fig. 14

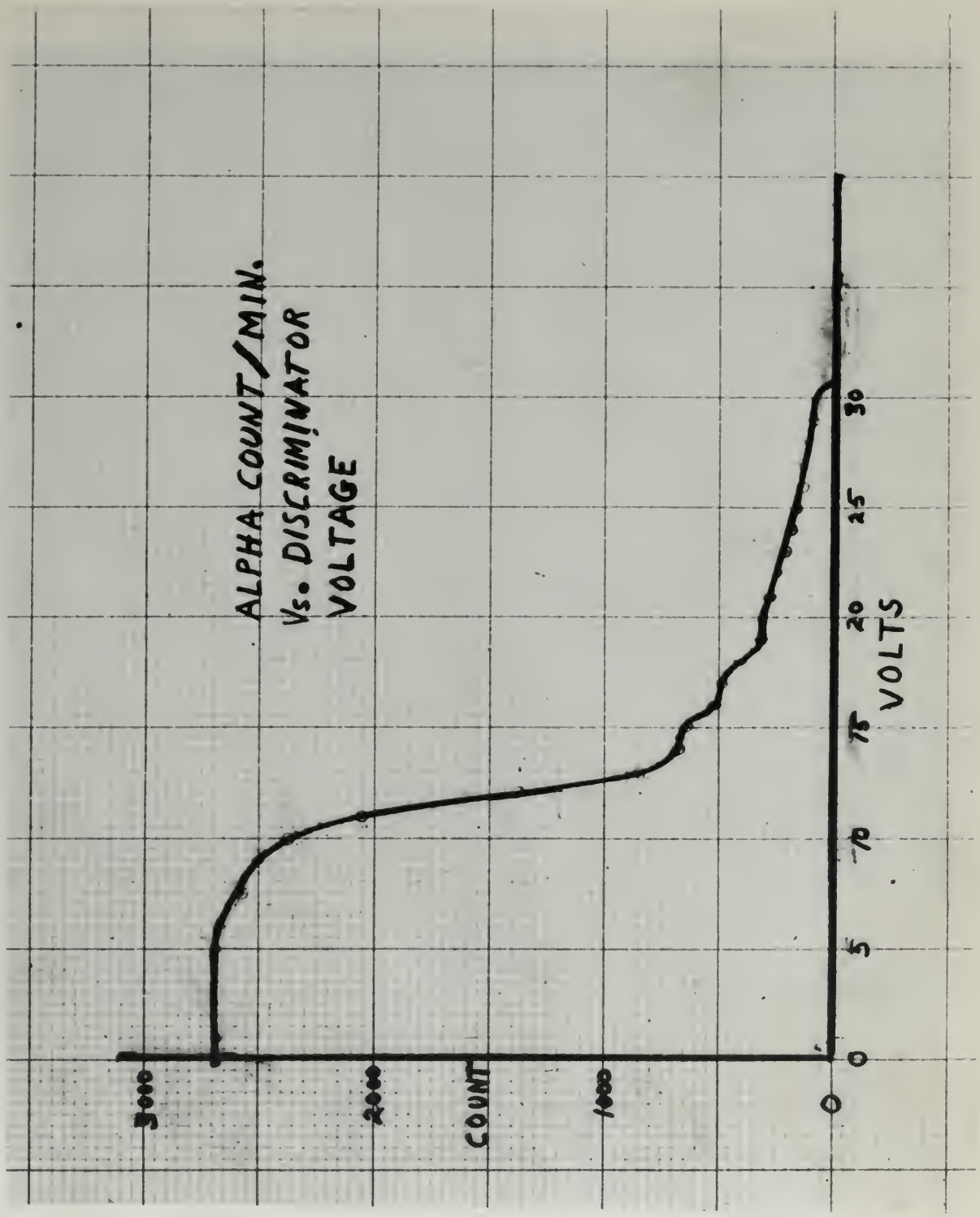
ALPHA COUNT/MIN.
Vs. DISCRIMINATOR
VOLTAGE
3000
2000
COUNT
1000
0
0
5
10
15
20
25
30
VOLTS

Fig. 15

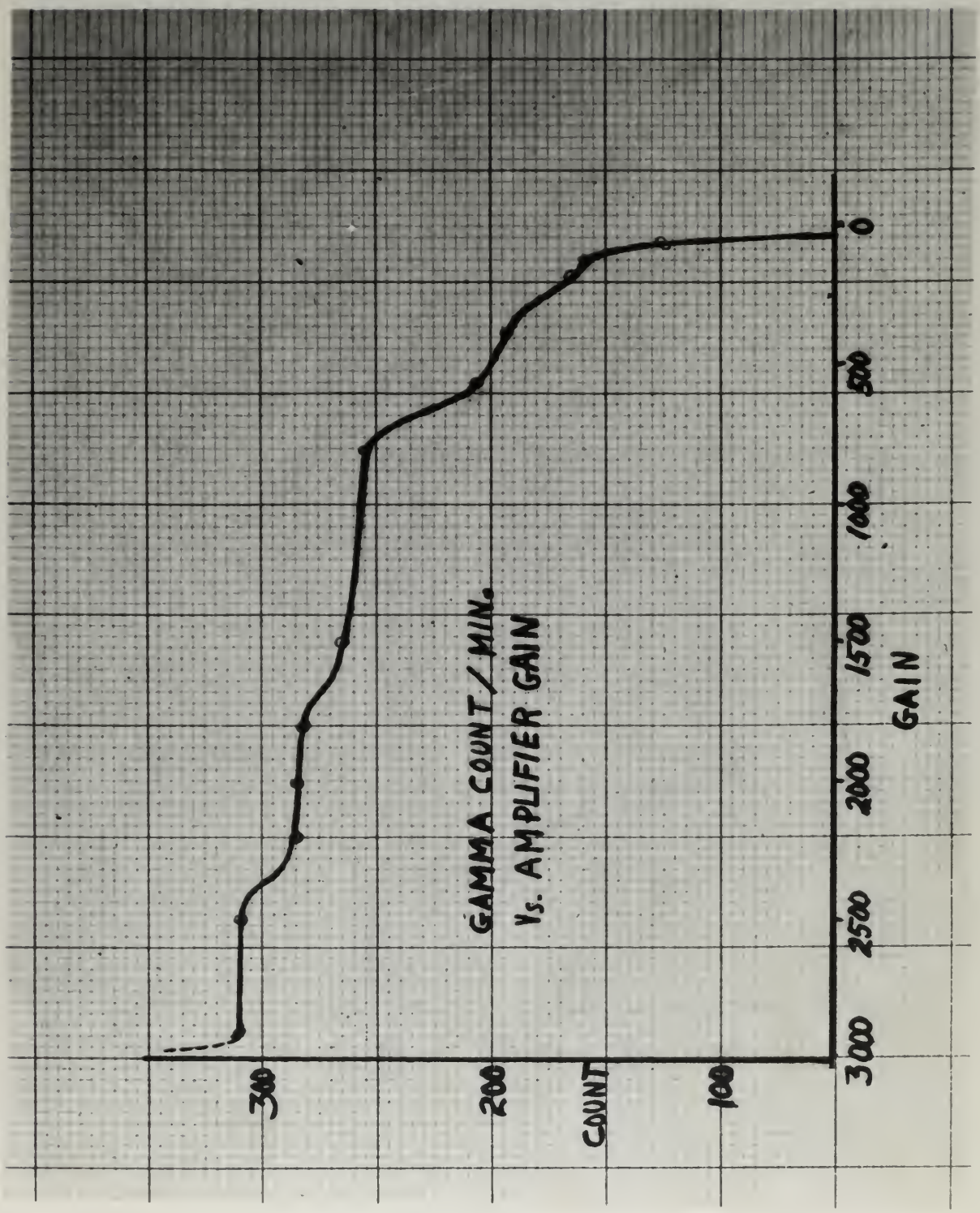
GAMMA COUNT / MIN.
VS. AMPLIFIER GAIN
300
200
COUNT
100
0
500
1000
1500
2000
2500
3000
GAIN

Fig. 16

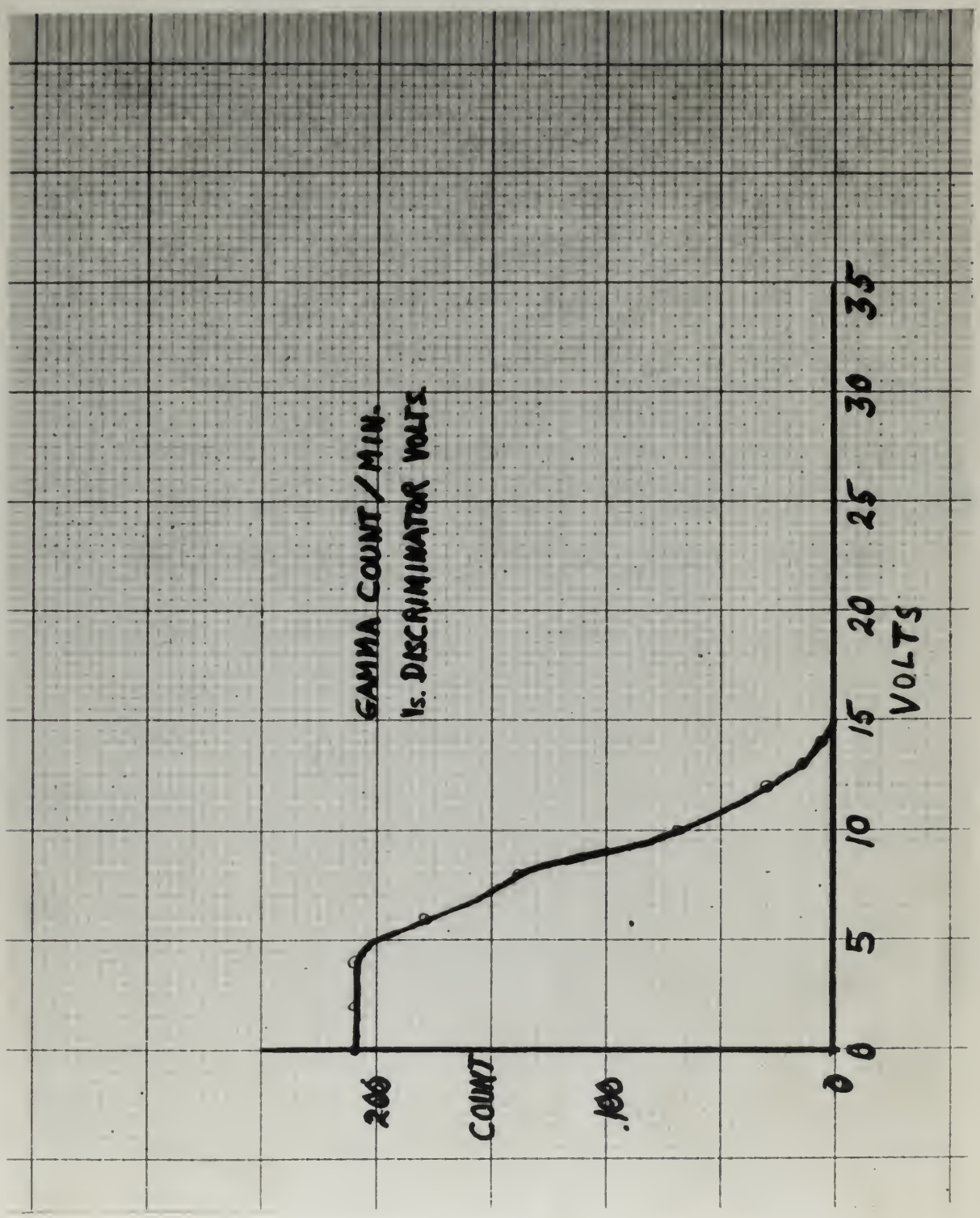
GAMMA COUNT / MIN.
vs. DISCRIMINATOR VOLTS.
200
COUNT
100
0
0
5
10
15
20
25
30
35
VOLTS

Fig. 17

at the time data was taken. The response to beta rays should be very similar to that obtained for gamma rays since both processes involve single electrons at the point where a pulse is initiated.

The curves shown in figures 11 through 17 indicate a somewhat better performance than that of tubes tested by Dr. Allen. Allen found that his optimum operating point was at or very near 4800 volts. Above this voltage the background count was observed by Allen to rise rather rapidly. Further, Allen's results do not show a "plateau" region when plotting gamma induced counts against amplifier gain. The true extent of the improvement can not be properly estimated until exhaustive measurements have been made.

CONCLUSIONS AND RECOMMENDATIONS, PART II

In the foregoing sections, the methods and results of testing the multiplier-detector have been presented. While it was not possible to make exhaustive studies of the measuring techniques or the tube performance, sufficient information was obtained to indicate these conclusions. A multiplier-detector of the Allen design may be heat treated in a stream of hydrogen with resulting performance comparable to or better than that given by a vacuum processed tube. Special measures can be taken to prevent corona and leakage from adversely affecting the performance of the tube. A properly constructed and processed tube can be used to count alpha, beta or gamma rays with high efficiency.

Among the further studies which are warranted are the following. An attempt should be made to decrease the resolving time of the electronic equipment associated with the detector. A video amplifier consisting of just a few stages of 829B tubes would aid greatly in making measurements where linearity in the amplifier is important. A study of the solid angle presented by the effective window of the tube is recommended as an important preliminary to many counting experiments.

REFERENCES

1. V.K. Zworykin, G. A. Morton, and L. A. Malter - "The Secondary-Emission Multiplier - A New Device" Proc. I.R.E., v 24, pp 351-375, (Mar., 1936).

2. V.K. Zworykin and J. A. Rajchman, "The Electrostatic Electron Multiplier," Proc. I.R.E., v 27, pp 558-566, (Sept., 1939).

3. J.S. Allen, "The Emission of Secondary Electrons from Metals Bombarded with Protons," Phys. Rev., v 55, p 336, (Feb., 1939)

4. R. Kollath, "Über die Sekundärelektronen - Emission des Berylliums" Annal. d. Phys, v 33, p 223 (Oct. 1938)

5. J. S. Allen, "Detection of Single Positive Ions, Electrons, and Photons by a Secondary Electron Multiplier," Phys. Rev., v 55, p 966 (May 1939)

6. A. Graves, "Modern Geiger Mueller Counters," Electronics, Jan. 1947, pp 80-83.

7. J.E. Owen Harries "Secondary Electron Radiation," Electronics, Sept. 1944, pp 100-108

8. J.F. Woodward lectures, Introduction to Nuclear Physics, M.I.T., Summer 1947.

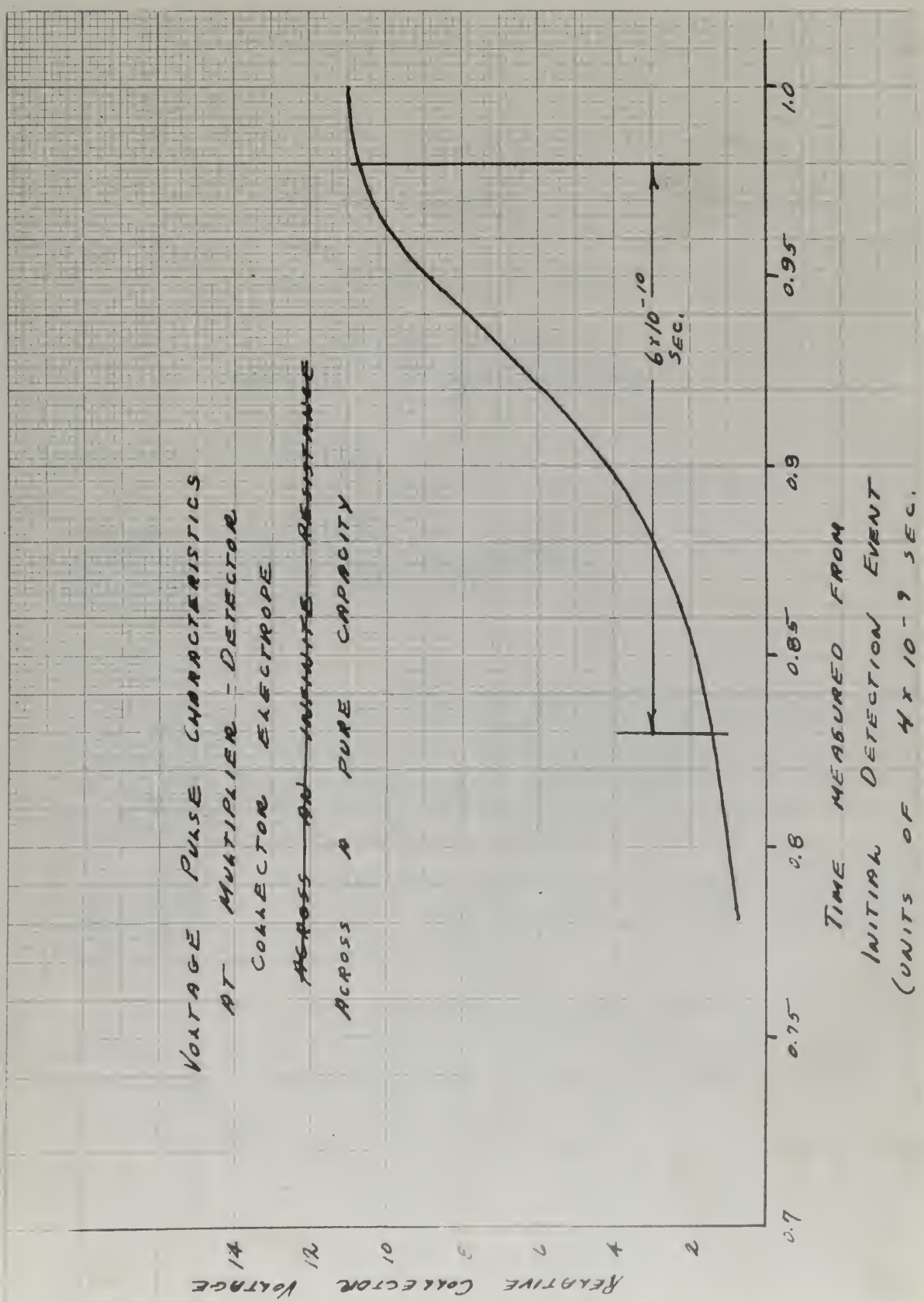
VOLTAGE PULSE CHARACTERISTICS
AT MULTIPLIER - DETECTOR
COLLECTOR ELECTRODE
~~ACROSS AN INFINITE RESISTANCE~~
ACROSS A PURE CAPACITY
6x10^-10 SEC.
TIME MEASURED FROM
INITIAL DETECTION EVENT
(UNITS OF 4 x 10^-9 SEC.
0.7
0.75
0.8
0.85
0.9
0.95
1.0
RELATIVE COLLECTOR VOLTAGE
14
12
10
8
6
4
2

Fig. 1

APPENDIX B

(Copy)

THE UNIVERSITY OF CHICAGO

Chicago 37, Ill.

Institute for Nuclear Studies

Office of the Director

March 6, 1947

Professor I. A. Getting
Synchrotron Laboratory, Room 24-041
Mass. Institute of Technology
Cambridge 39, Mass.

Dear Dr. Getting:

I am enclosing drawings of the latest version of multiplier tube in use here. The electrodes are formed from commercial beryllium copper sheet approximately 5 to 7 mils thick. The alloy contains approximately 2% Be by weight and was obtained from the Beryllium Company of America. If possible, the alloy should be annealed dead soft.

The cleaning procedure consists in polishing the electrodes either with fine abrasive paper or with a small felt polishing wheel. After the polishing operation the electrodes are cleaned with CCl_4.

We assemble the complete electrode structure and place it in a glass tube which is then evacuated. The electrodes are heat treated by means of an R.F. coil placed around the glass tube. The temperature of the electrodes is about 600 to 700°C (a dull red) and the treatment time about ten minutes. After the heat treatment, the electrode system may be removed from the tube and mounted in the metal multiplier tube shell. The electrodes may be exposed to the air for several hours without an appreciable decrease in the secondary properties. After repeated exposures to air the multiplication of the tube will decrease. However, the electrodes may be reactivated by the heat treatment just described.

Sincerely yours,

/s/ James S. Allen

DWG. NO. C-1025-B

PART NO.	DWG. NO.	STOCK ITEMS	NO. REQ'D.	NAME
25		1/4-20 x 1" LG.	4	BOLTS - HEX HD. - STEEL
24		8-32	8	WINGNUTS
23		4-40 x 1/8 LG.	4	SET SCREWS - HD'LESS - STEEL
22		10-24 x 1/4 LG.	3	FLAT HD. SCREWS - STEEL
21		1/4 - 20	8	HEX NUTS - STEEL
20	E-1025-X		1	AMPLIFIER CONNECTOR
19	B-1025-U	USED DURING HEAT TREATING ONLY	1	BELL JAR MTG. PLATE
18	B-1025-T	USED DURING HEAT TREATING ONLY	1	BELL JAR
17	C-1025-S		1	WINDOW GASKET
16	C-1025-R		1	WINDOW FLANGE
15	C-1025-Q		1	WINDOW SEAT
14	B-1025-P		1	SHELL
13	A-1025-O		AS PER DRWG.	ELECTRODES & SHIELD
12	B-1025-N		2	ELECTRODE MTG. PLATE
11	C-1025-M		2	SMALL FITTING
10	C-1025-L		2	LARGE FITTING
9	C-1025-K		1	COLLECTOR LEAD-IN
8	C-1025-J		4	SUPPORTING LEAD-IN
7	C-1025-I		8	LEAD-IN
6	C-1025-H		1	SHELL FLANGE GASKET
5	B-1025-G		1	SHELL FLANGE
4	A-1025-F		1	PLUMBING
3	B-1025-E		1	BASE FLANGE
2	C-1025-D		3	BASE FLANGE POST
1	B-1025-C		1	BOTTOM MTG. PLATE
	D-1025-A			MULTIPLIER DETECTOR TUBE ASSEM.

DWG. NO. C-1025-B

ALSO SEE DWGS.
D-1025-V LEAD-IN CONN.
B-1025-W LEAD-IN (ISOMETRIC)

LABORATORY FOR NUCLEAR SCIENCE AND ENGINEERING
MASSACHUSETTS INSTITUTE OF TECHNOLOGY
CAMBRIDGE, MASS.

DRAWN FOR ROWEN-DARE	APPROVED BY
DRAWN BY SMITH	SCALE —
CHECKED BY	DATE AUGUST 29, 1947

TITLE: PARTS LIST

DWG. NO. C-1025-B | FILE 6421

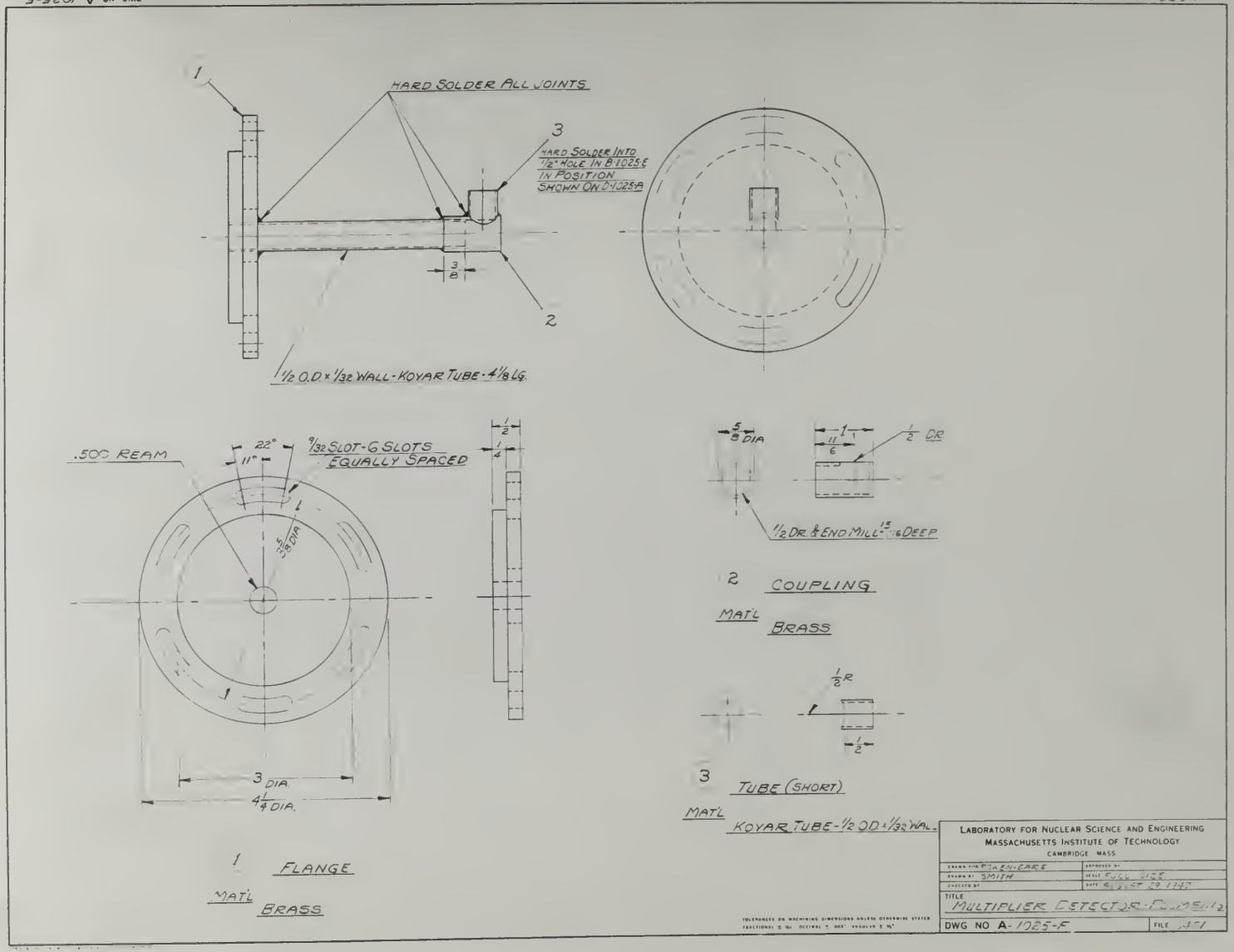
HARD SOLDER ALL JOINTS
HARD SOLDER INTO 1/2" HOLE IN B-1025-E IN POSITION SHOWN ON D-1025-A
1/2 O.D. x 1/32 WALL - KOVAR TUBE - 4 1/8 LG.
.500 REAM
22°
11°
9/32 SLOT - 6 SLOTS EQUALLY SPACED
5/8 DIA
3 DIA.
4 1/4 DIA.
1 FLANGE
MAT'L BRASS
5/8 DIA
1/2 DR.
1/2 DR. & END MILL 15/16 DEEP
2 COUPLING
MAT'L BRASS
1/2 R
3 TUBE (SHORT)
MAT'L KOVAR TUBE - 1/2 OD x 1/32 WALL
LABORATORY FOR NUCLEAR SCIENCE AND ENGINEERING
MASSACHUSETTS INSTITUTE OF TECHNOLOGY
CAMBRIDGE MASS
DRAWN FOR ROWEN-CARE
DRAWN BY SMITH
CHECKED BY
APPROVED BY
SCALE FULL SIZE
DATE AUGUST 29 1947
TITLE MULTIPLIER DETECTOR
DWG NO A-1025-F
FILE

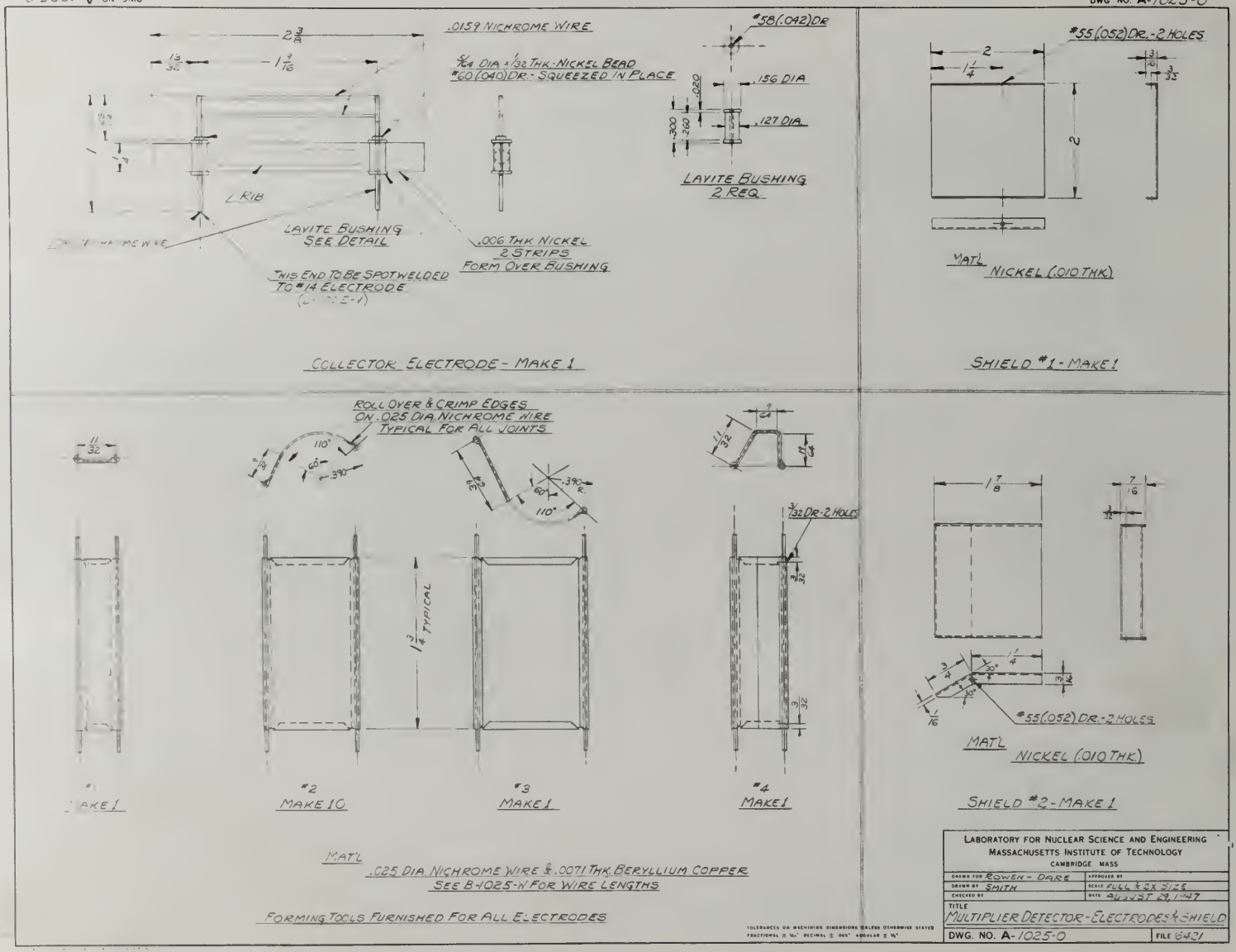
.0159 NICHROME WIRE
5/64 DIA x 1/32 THK. NICKEL BEAD
#60 (.040) DR. - SQUEEZED IN PLACE
#58 (.042) DR
.156 DIA
.127 DIA
LAVITE BUSHING
2 REQ.
RIB
LAVITE BUSHING
SEE DETAIL
.006 THK NICKEL
2 STRIPS
FORM OVER BUSHING
THIS END TO BE SPOTWELDED
TO #14 ELECTRODE
COLLECTOR ELECTRODE - MAKE 1
#55 (.052) DR. - 2 HOLES
MAT'L
NICKEL (.010 THK.)
SHIELD #1 - MAKE 1
ROLL OVER & CRIMP EDGES
ON .025 DIA NICHROME WIRE
TYPICAL FOR ALL JOINTS
3/32 DR - 2 HOLES
1 3/4 TYPICAL
#2
MAKE 10
#3
MAKE 1
#4
MAKE 1
#55 (.052) DR. - 2 HOLES
MAT'L
NICKEL (.010 THK.)
SHIELD #2 - MAKE 1
MAT'L
.025 DIA. NICHROME WIRE & .0071 THK. BERYLLIUM COPPER
SEE B-1025-W FOR WIRE LENGTHS
FORMING TOOLS FURNISHED FOR ALL ELECTRODES
LABORATORY FOR NUCLEAR SCIENCE AND ENGINEERING
MASSACHUSETTS INSTITUTE OF TECHNOLOGY
CAMBRIDGE MASS
DRAWN FOR ROWEN - DARE
DRAWN BY SMITH
CHECKED BY
APPROVED BY
SCALE FULL & 2X SIZE
DATE AUGUST 29, 1947
TITLE
MULTIPLIER DETECTOR - ELECTRODES & SHIELD
DWG. NO. A-1025-0
FILE 6421

DWG. NO. B-1025-C

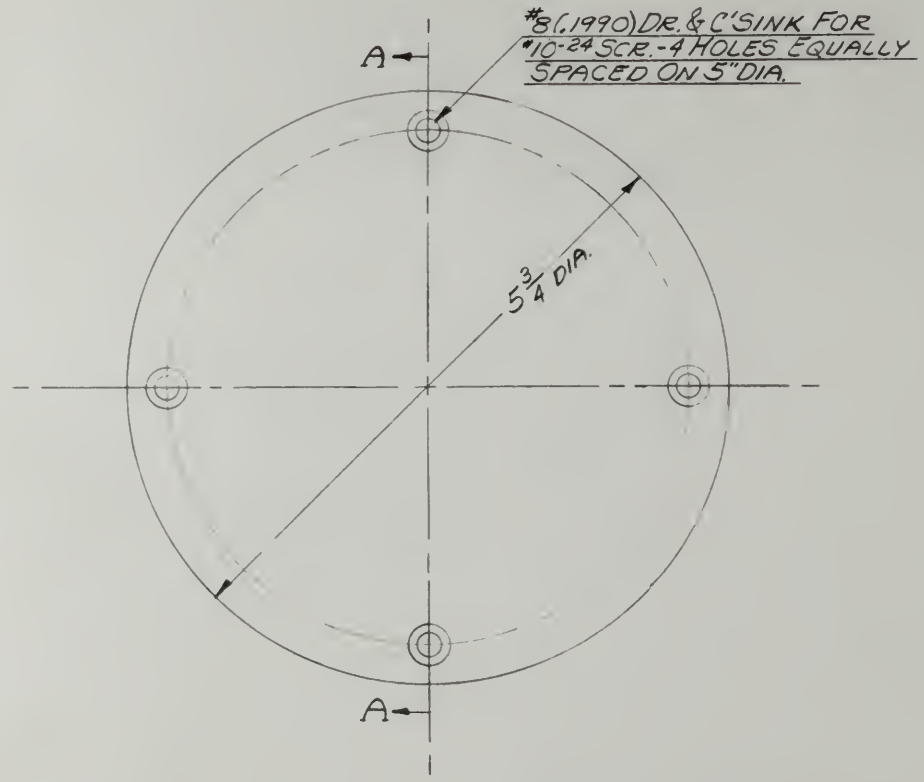

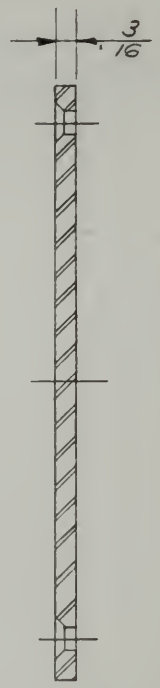

MAT'L C.R.S.

LABORATORY FOR NUCLEAR SCIENCE AND ENGINEERING
MASSACHUSETTS INSTITUTE OF TECHNOLOGY
CAMBRIDGE. MASS.

DRAWN FOR ROWEN-DARE	APPROVED BY
DRAWN BY SMITH	SCALE FULL SIZE
CHECKED BY	DATE AUGUST 21, 1947

TITLE: MULTIPLIER DETECTOR - BOTTOM MTG. PLATE

DWG. NO. B-1025-C | FILE 6421

TOLERANCES ON MACHINING DIMENSIONS UNLESS OTHERWISE STATED
FRACTIONAL ± 1/64" DECIMAL ± .005". ANGULAR ± 1/2°

DWG. NO. B-1025-C

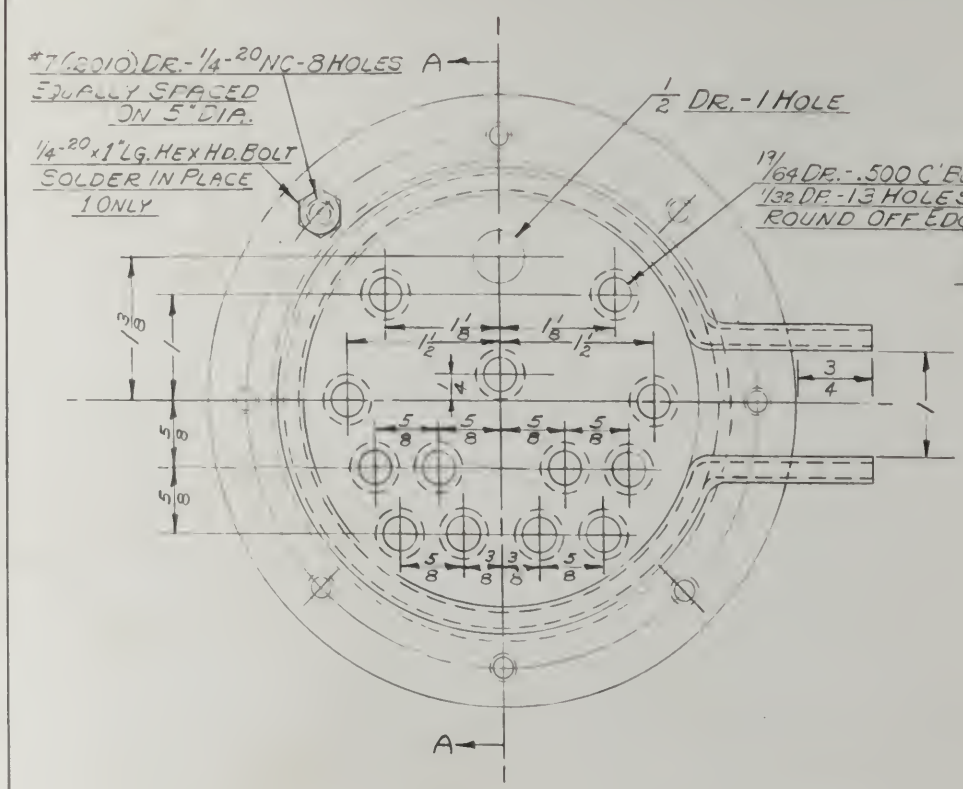

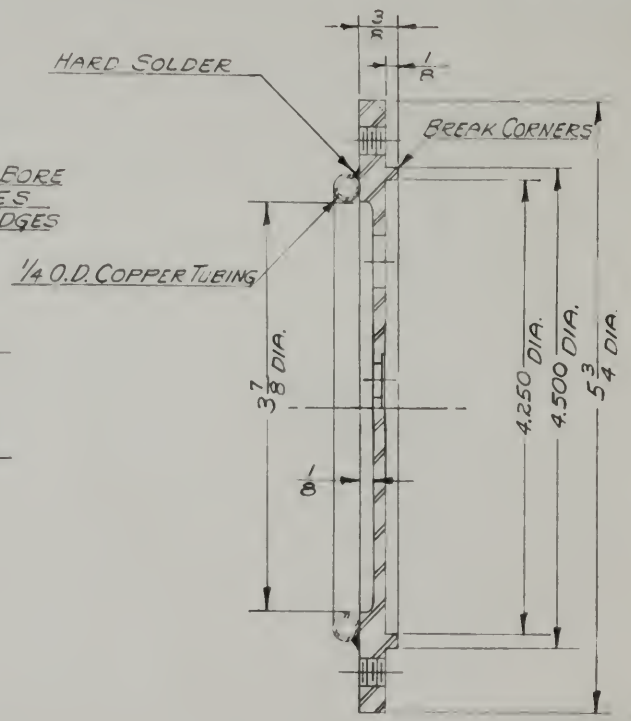

SECTION A-A

MAT'L
S.A.E. #1020

FINISH
NICKEL PLATE .001
THK. & POLISH

REF.
UNIV. OF CHICAGO DWG.
B-0014-A

TOLERANCES ON MACHINING DIMENSIONS UNLESS OTHERWISE STATED
FRACTIONAL ± 1/64" DECIMAL ± .005" ANGULAR ± 1/4°

DIMENSIONS BEFORE PLATING

LABORATORY FOR NUCLEAR SCIENCE AND ENGINEERING
MASSACHUSETTS INSTITUTE OF TECHNOLOGY
CAMBRIDGE, MASS.

DRAWN FOR ROWEN - DARE	APPROVED BY
DRAWN BY SMITH	SCALE FULL SIZE
CHECKED BY	DATE AUGUST 29, '47

TITLE: MULTIPLIER DETECTOR BASE FLANGE

DWG. NO. B-1025-E | FILE 6421

DWG. NO. B-1025-E

DWG. NO. B-1025-G

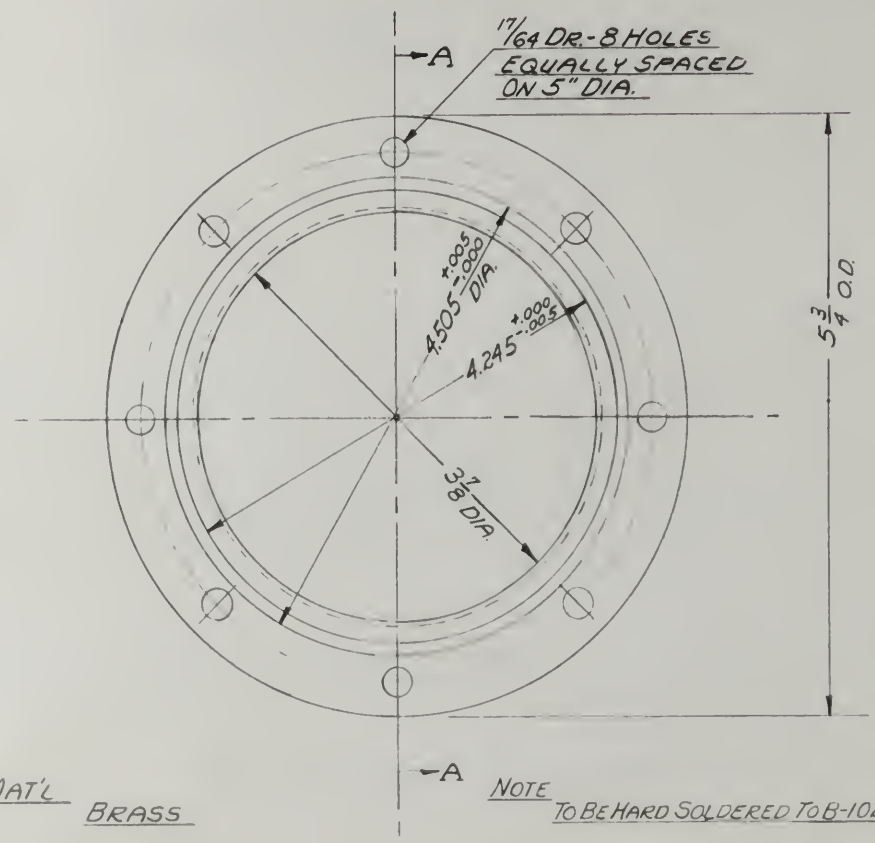

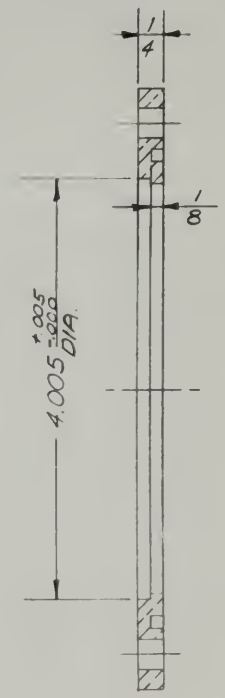

SECTION AA

MAT'L BRASS

NOTE TO BE HARD SOLDERED TO B-1025-P

DIMENSIONS BEFORE PLATING

LABORATORY FOR NUCLEAR SCIENCE AND ENGINEERING
MASSACHUSETTS INSTITUTE OF TECHNOLOGY
CAMBRIDGE, MASS

DRAWN FOR KOWEN-DARE	APPROVED BY
DRAWN BY SMITH	SCALE FULL SIZE
CHECKED BY	DATE AUGUST 29, 1947

TITLE: MULTIPLIER DETECTOR SHELL FLANGE

DWG. NO. B-1025-G | FILE 6421

TOLERANCES ON MACHINING DIMENSIONS UNLESS OTHERWISE STATED
FRACTIONAL ± 1/64" DECIMAL ± .005" ANGULAR ± 1/2°

DWG. NO. B-1025-G

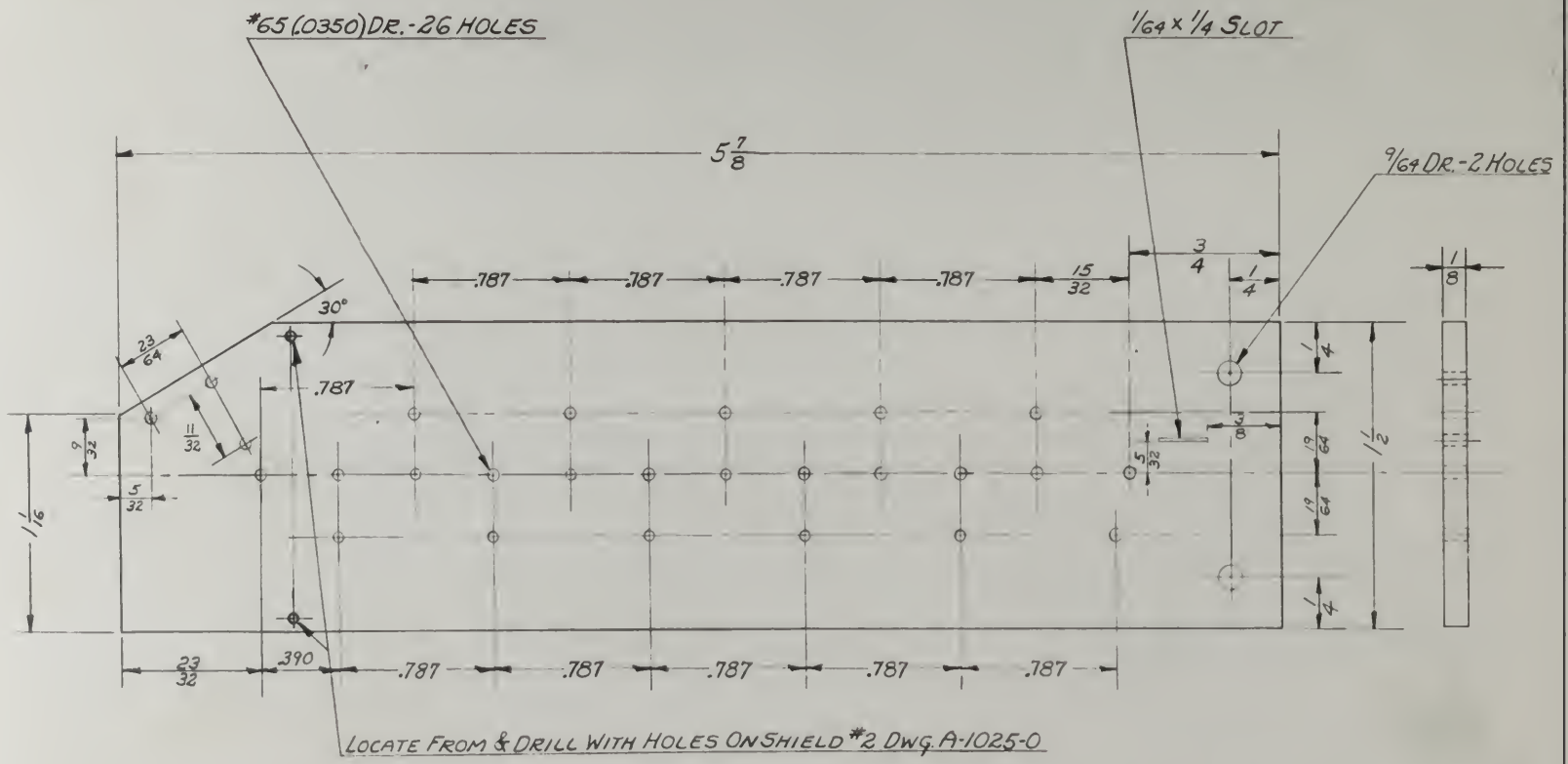

MAT'L MYCALEX

LABORATORY FOR NUCLEAR SCIENCE AND ENGINEERING
MASSACHUSETTS INSTITUTE OF TECHNOLOGY
CAMBRIDGE. MASS.

DRAWN FOR ROWEN-DARE	APPROVED BY
DRAWN BY SMITH	SCALE 2 X SIZE
CHECKED BY	DATE AUGUST 29, 1947

TITLE: MULTIPLIER DETECTOR ELECTRODE MTG. PLATE

DWG. NO. B-1025-N | FILE 6-21

TOLERANCES ON MACHINING DIMENSIONS UNLESS OTHERWISE STATED
FRACTIONAL ± 1/64" DECIMAL ± .005" ANGULAR ± 1/2°

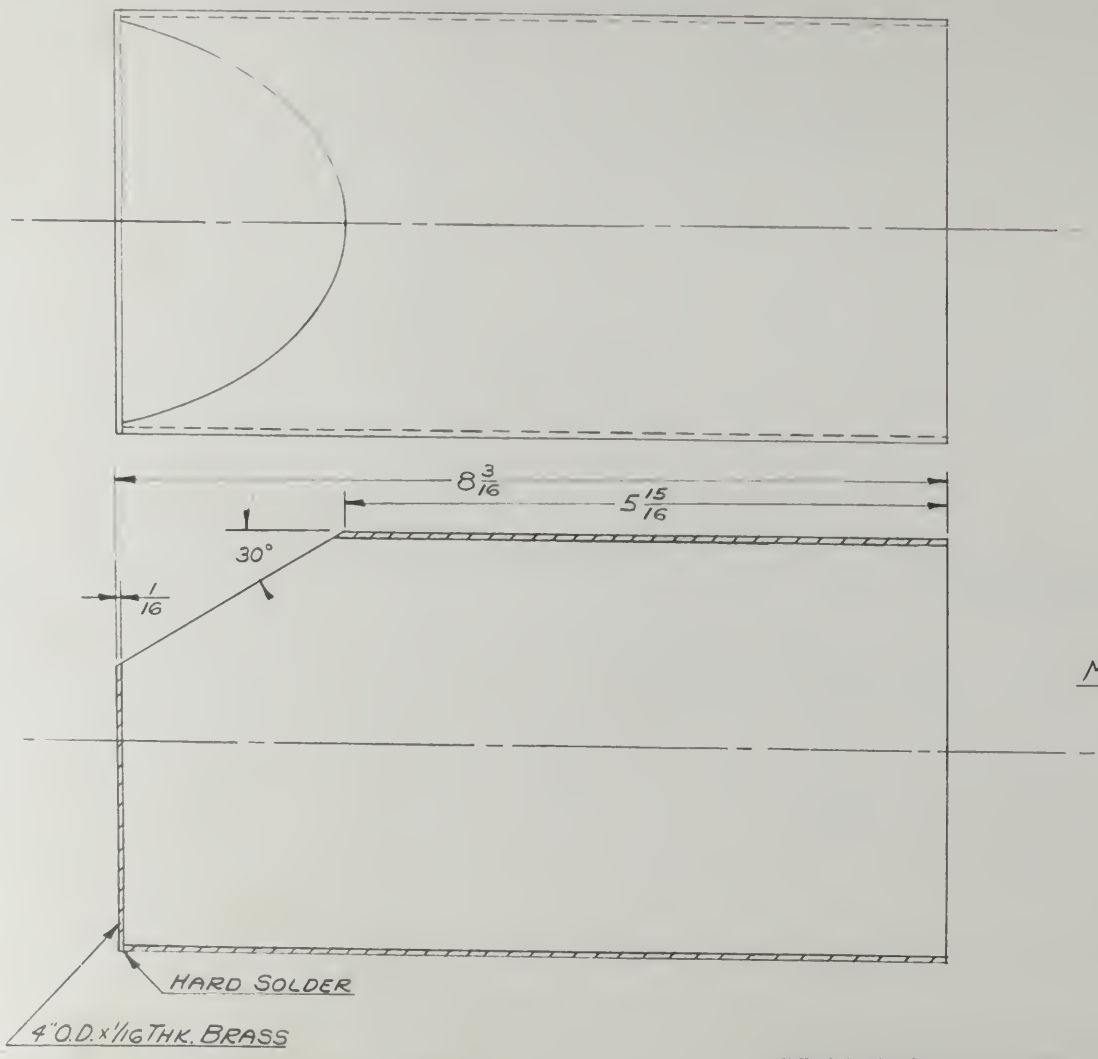

MAT'L 4" O.D. BRASS TUBING - 1/16 WALL

TOLERANCES ON MACHINING DIMENSIONS UNLESS OTHERWISE STATED
FRACTIONAL ± 1/64" DECIMAL ± .005" ANGULAR ± 1/2°

LABORATORY FOR NUCLEAR SCIENCE AND ENGINEERING MASSACHUSETTS INSTITUTE OF TECHNOLOGY CAMBRIDGE. MASS	
DRAWN FOR ROWEN-DARE	APPROVED BY
DRAWN BY SMITH	SCALE FULL SIZE
CHECKED BY	DATE AUGUST 29, 1947
TITLE: MULTIPLIER DETECTOR SHELL	
DWG. NO. B-1025-P	FILE 6421

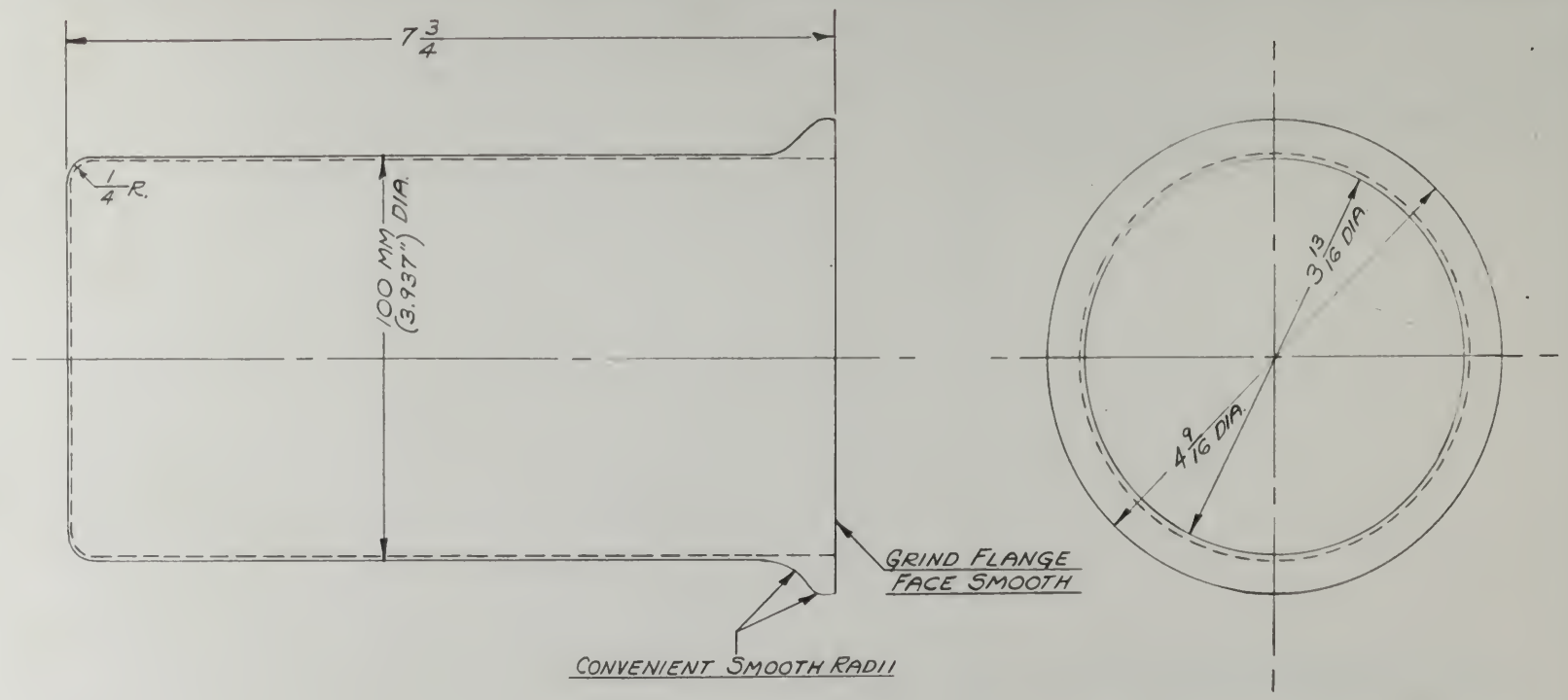

SEAL TO B-1025-U WITH SILICON GREASE

MAT'L PYREX GLASS

THIS PART & B-1025-U REPLACE B-1025-P & DETS. DURING HEAT TREATMENT OF TUBE.

STD. GLASSWORKING TOLERANCES TO APPLY

LABORATORY FOR NUCLEAR SCIENCE AND ENGINEERING
MASSACHUSETTS INSTITUTE OF TECHNOLOGY
CAMBRIDGE. MASS.

DRAWN FOR ROWEN - DARE	APPROVED BY
DRAWN BY SMITH	SCALE FULL SIZE
CHECKED BY	DATE AUGUST 29, 1947
TITLE: MULTIPLIER DETECTOR - BELL JAR	
DWG. NO. B-1025-T	FILE 6421

DWG. NO. B-1025-T

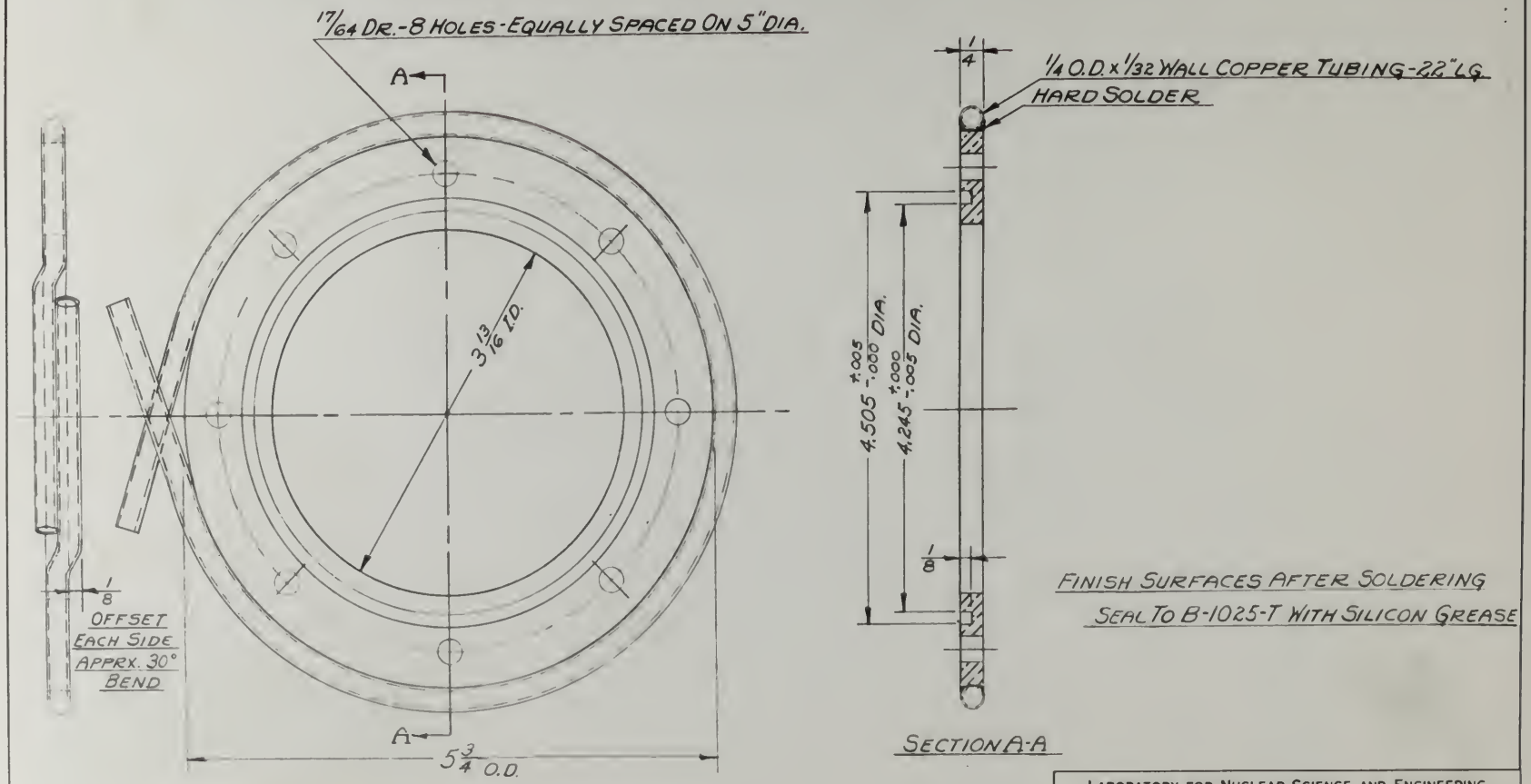

MAT'L BRASS

TOLERANCES ON MACHINING DIMENSIONS UNLESS OTHERWISE STATED
FRACTIONAL ± 1/64" DECIMAL ± .005" ANGULAR ± 1/4°

LABORATORY FOR NUCLEAR SCIENCE AND ENGINEERING
MASSACHUSETTS INSTITUTE OF TECHNOLOGY
CAMBRIDGE, MASS.

DRAWN FOR ROWEN-DARE	APPROVED BY
DRAWN BY SMITH	SCALE FULL SIZE
CHECKED BY	DATE AUGUST 29, 1947

TITLE: MULTIPLIER DETECTOR BELL JAR MTG. PLATE

DWG. NO. B-1025-U FILE 6421

DWG. NO. B-1025-W

* TOTAL LEAD-IN LENGTHS

#5	8 1/16
#6	5 11/16
#12	2 11/16
#4	9 1/8
#7	7
#3	10 1/4
#13	3
SHD, 2, 1 + SHD	9 13/16
#8	6 1/2
#14	2 3/16
#9	5 1/4
#10	3 5/16
#11	3 3/8

*ALL BENDS 90° - 3/16 MAX. RADIUS MEASURED FROM TOP OF EYELET.

DWG. NO. B-1025-W

LABORATORY FOR NUCLEAR SCIENCE AND ENGINEERING
MASSACHUSETTS INSTITUTE OF TECHNOLOGY
CAMBRIDGE, MASS.

DRAWN FOR: ROWEN-DARE
APPROVED BY:
DRAWN BY: SMITH
SCALE: FULL SIZE
CHECKED BY:
DATE: AUGUST 29, 1947
TITLE: ELECTRODE LEAD-INS (ISOMETRIC)

TOLERANCES ON MACHINING DIMENSIONS UNLESS OTHERWISE STATED

DWG. NO. B-1025-X

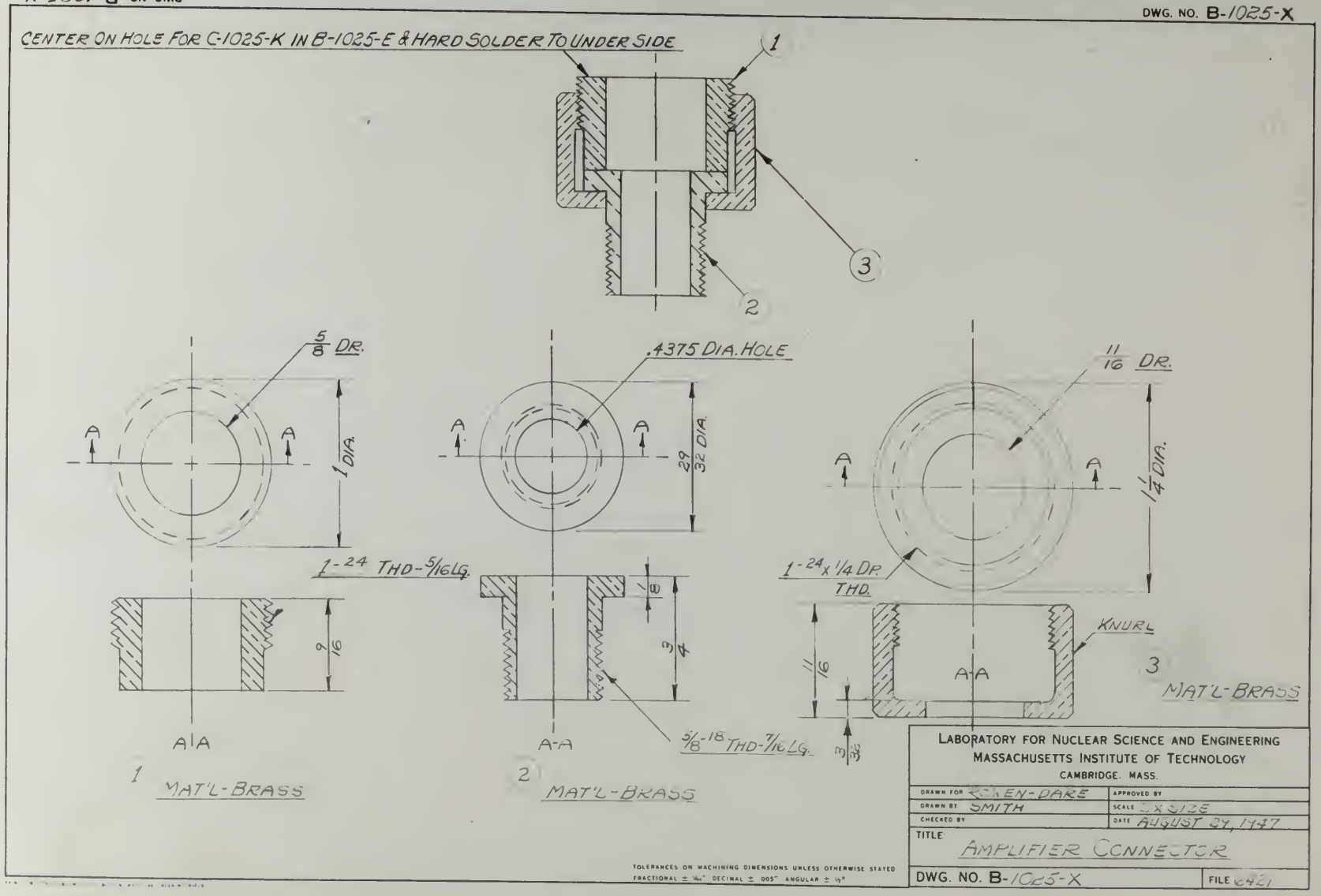

DWG. NO. B-1025-X

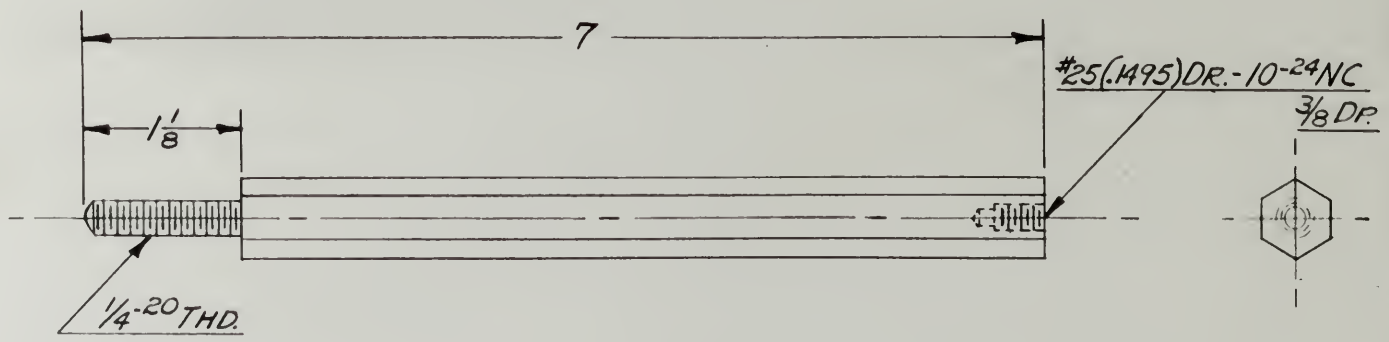

MAT'L
1/2 HEX CRS

LABORATORY FOR NUCLEAR SCIENCE AND ENGINEERING
MASSACHUSETTS INSTITUTE OF TECHNOLOGY
CAMBRIDGE. MASS.

DRAWN FOR ROWEN-DARE	APPROVED BY
DRAWN BY SMITH	SCALE FULL SIZE
CHECKED BY	DATE AUGUST 29, 1947

TITLE:
MULTIPLIER DETECTOR-BASEFLANGE POST

DWG. NO. C-1025-D | FILE 6421

TOLERANCES ON MACHINING DIMENSIONS UNLESS OTHERWISE STATED
FRACTIONAL ± 1/64" DECIMAL ± .005" ANGULAR ± 1/2°

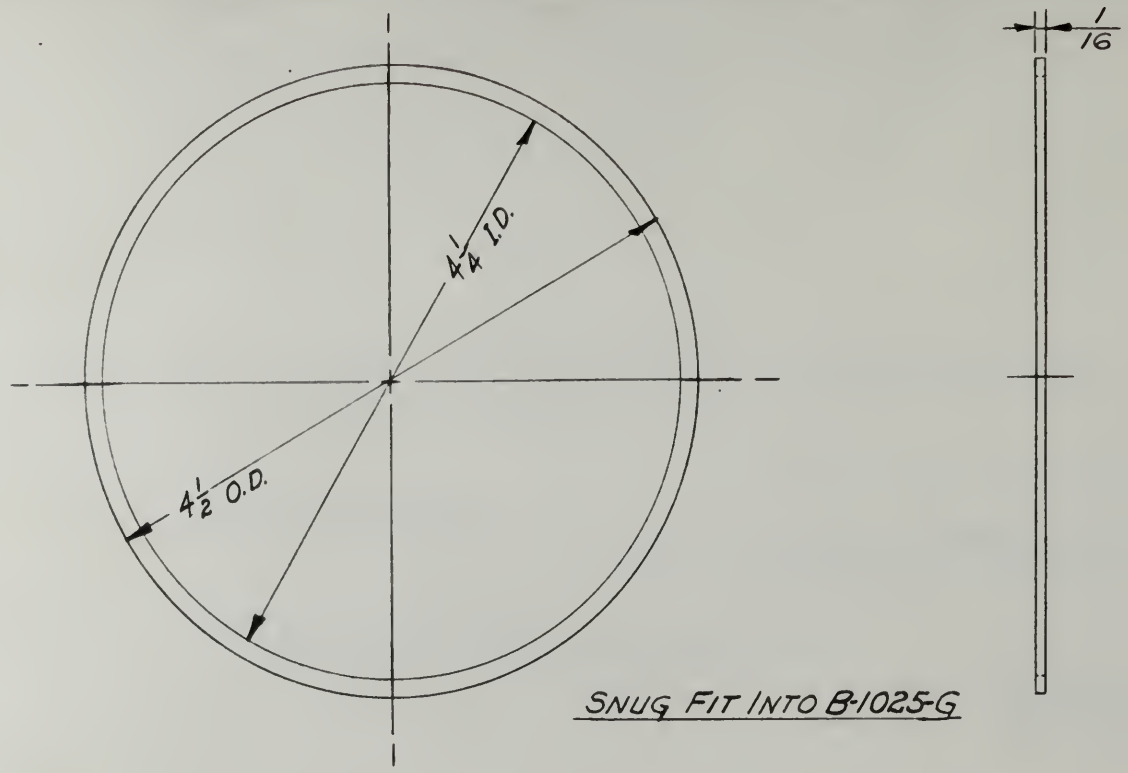

SNUG FIT INTO B-1025-G

MAT'L
NEOPRENE

TOLERANCES ON MACHINING DIMENSIONS UNLESS OTHERWISE STATED.
FRACTIONAL ± 1/64". DECIMAL ± .005". ANGULAR ± 1/2°

LABORATORY FOR NUCLEAR SCIENCE AND ENGINEERING MASSACHUSETTS INSTITUTE OF TECHNOLOGY CAMBRIDGE. MASS.	
DRAWN FOR ROWEN-DARE	APPROVED BY
DRAWN BY SMITH	SCALE FULL SIZE
CHECKED BY	DATE AUGUST 29, 1947
TITLE: MULTIPLIER DETECTOR-SHELL FLANGE GASKET	
DWG. NO. C-1025-H	FILE 6421

PRINTED BY SPAULDING MOSS CO BOSTON MASS RE ORDER NO A-220

DWG. NO. C-1025-I

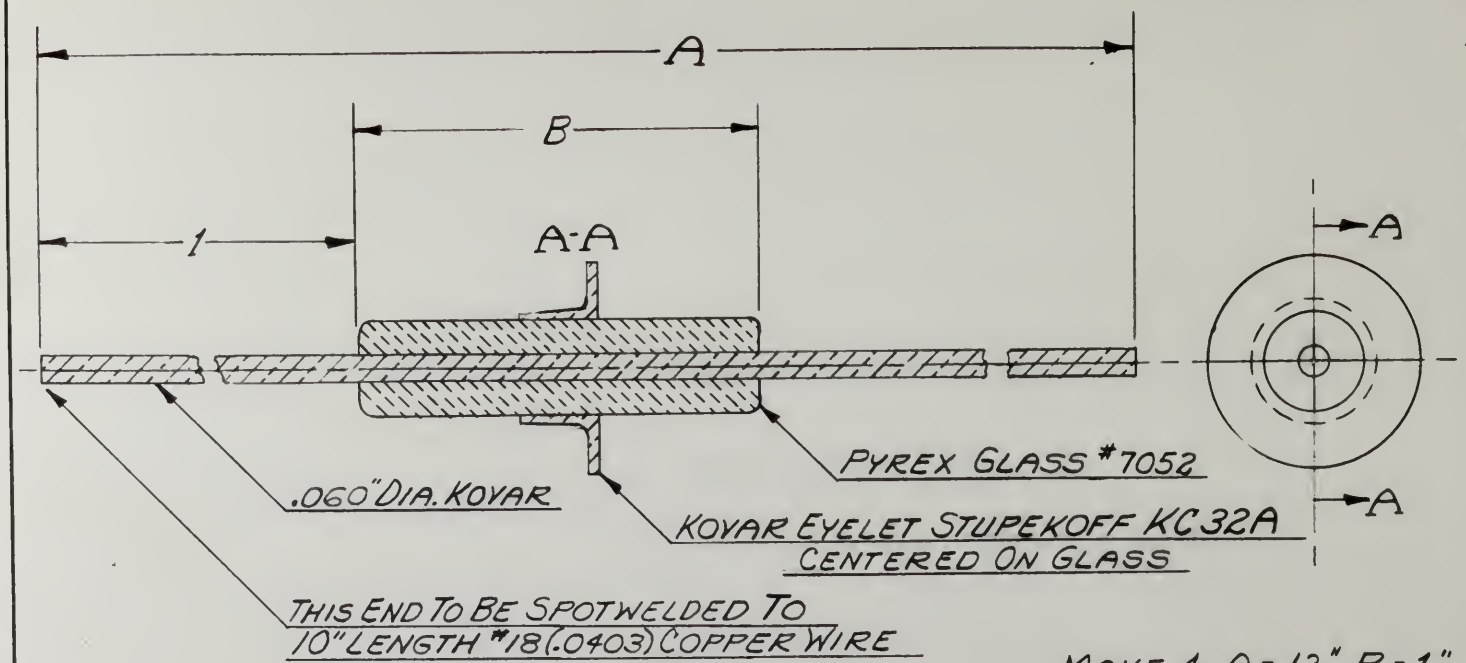

MAKE 4 A = 13" B = 1"
MAKE 4 A = 9" B = 5/8"

LABORATORY FOR NUCLEAR SCIENCE AND ENGINEERING
MASSACHUSETTS INSTITUTE OF TECHNOLOGY
CAMBRIDGE. MASS.

DRAWN FOR J. DARE - W. ROWEN	APPROVED BY
DRAWN BY SMITH	SCALE 3 X SIZE APPROX.
CHECKED BY	DATE AUGUST 29, 1947

TITLE: MULTIPLIER DETECTOR LEAD-IN

DWG. NO. C-1025-I | FILE 6421

TOLERANCES ON MACHINING DIMENSIONS UNLESS OTHERWISE STATED:
FRACTIONAL ± 1/64" DECIMAL ± .005". ANGULAR ± 1/2°

PRINTED BY SPAULDING MOSS CO. BOSTON MASS. RE ORDER NO A-220

DWG. NO. C-1025-J

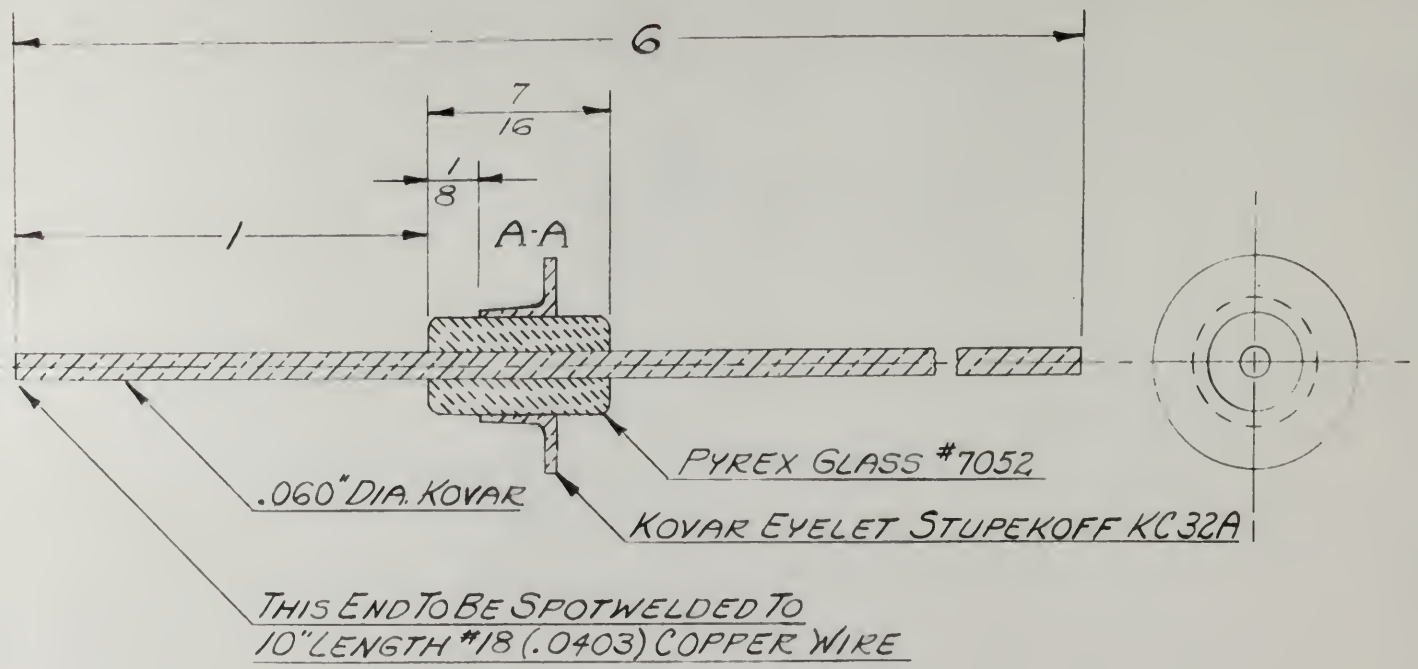

LABORATORY FOR NUCLEAR SCIENCE AND ENGINEERING
MASSACHUSETTS INSTITUTE OF TECHNOLOGY
CAMBRIDGE. MASS.

DRAWN FOR J. DARE-W. ROWEN	APPROVED BY
DRAWN BY SMITH	SCALE 3X SIZE
CHECKED BY	DATE AUGUST 29, 1947

TITLE: MULTIPLIER DETECTOR SUPPORTING LEAD-IN

DWG. NO. C-1025-J FILE 6421

TOLERANCES ON MACHINING DIMENSIONS UNLESS OTHERWISE STATED
FRACTIONAL ± 1/64" DECIMAL ± .005". ANGULAR ± 1/2°

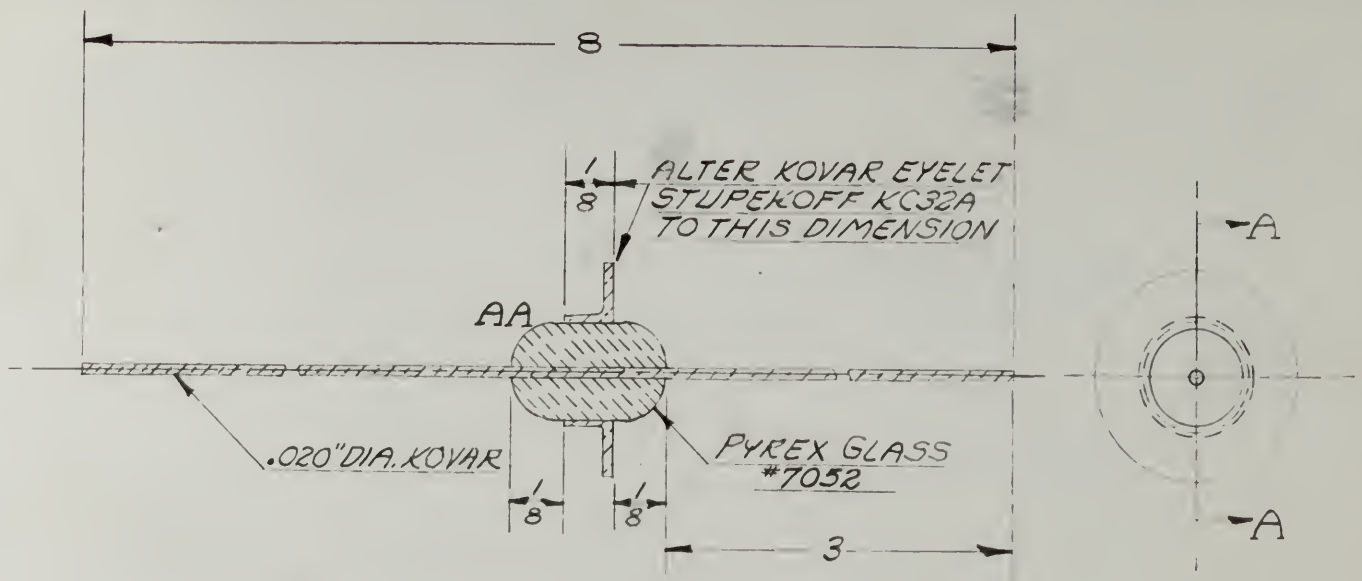

LABORATORY FOR NUCLEAR SCIENCE AND ENGINEERING
MASSACHUSETTS INSTITUTE OF TECHNOLOGY
CAMBRIDGE. MASS.

DRAWN FOR ROWEN-DARE	APPROVED BY
DRAWN BY SMITH	SCALE 3X SIZE
CHECKED BY	DATE AUGUST 29, 1947

TITLE: MULTIPLIER DETECTOR COLLECTOR LEAD-IN

DWG. NO. C- 1025-K | FILE 5721

TOLERANCES ON MACHINING DIMENSIONS UNLESS OTHERWISE STATED
FRACTIONAL ± 1/64" DECIMAL ± .005". ANGULAR ± 1/2°

DWG. NO. C-1025-K

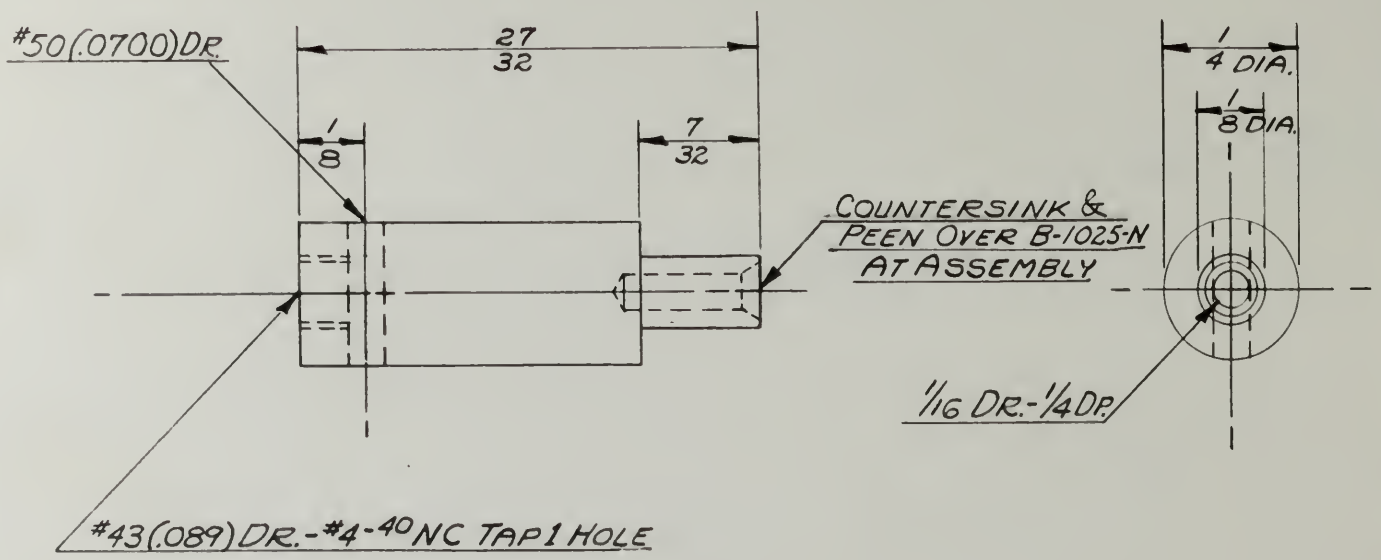

MAT'L NICKEL

LABORATORY FOR NUCLEAR SCIENCE AND ENGINEERING
MASSACHUSETTS INSTITUTE OF TECHNOLOGY
CAMBRIDGE. MASS.

DRAWN FOR ROWEN-DARE	APPROVED BY
DRAWN BY SMITH	SCALE 4 X SIZE
CHECKED BY	DATE AUGUST 29, 1947

TITLE: MULTIPLIER DETECTOR-LARGE FITTING

DWG. NO. C-1025-L | FILE 6421

TOLERANCES ON MACHINING DIMENSIONS UNLESS OTHERWISE STATED:
FRACTIONAL ± 1/64". DECIMAL ± .005". ANGULAR ± 1/2°

PRINTED BY SPAULDING MOSS CO. BOSTON MASS. RE ORDER NO. A-220

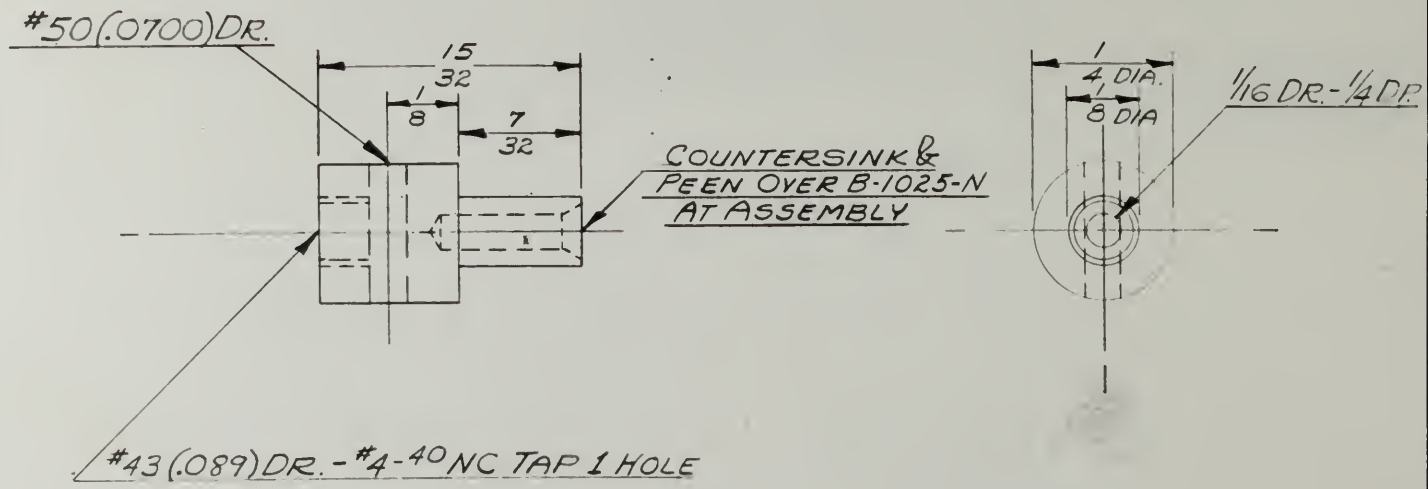

MAT'L NICKEL

TOLERANCES ON MACHINING DIMENSIONS UNLESS OTHERWISE STATED
FRACTIONAL ± 1/64" DECIMAL ± .005" ANGULAR ± 1/2°

LABORATORY FOR NUCLEAR SCIENCE AND ENGINEERING
MASSACHUSETTS INSTITUTE OF TECHNOLOGY
CAMBRIDGE, MASS.

DRAWN FOR ROWEN - DARE	APPROVED BY
DRAWN BY SMITH	SCALE 4 X SIZE
CHECKED BY	DATE AUGUST 29, 1947

TITLE: MULTIPLIER DETECTOR SM. FITTING

DWG. NO. C-1025-M | FILE 6421

DWG. NO. C-1025-M

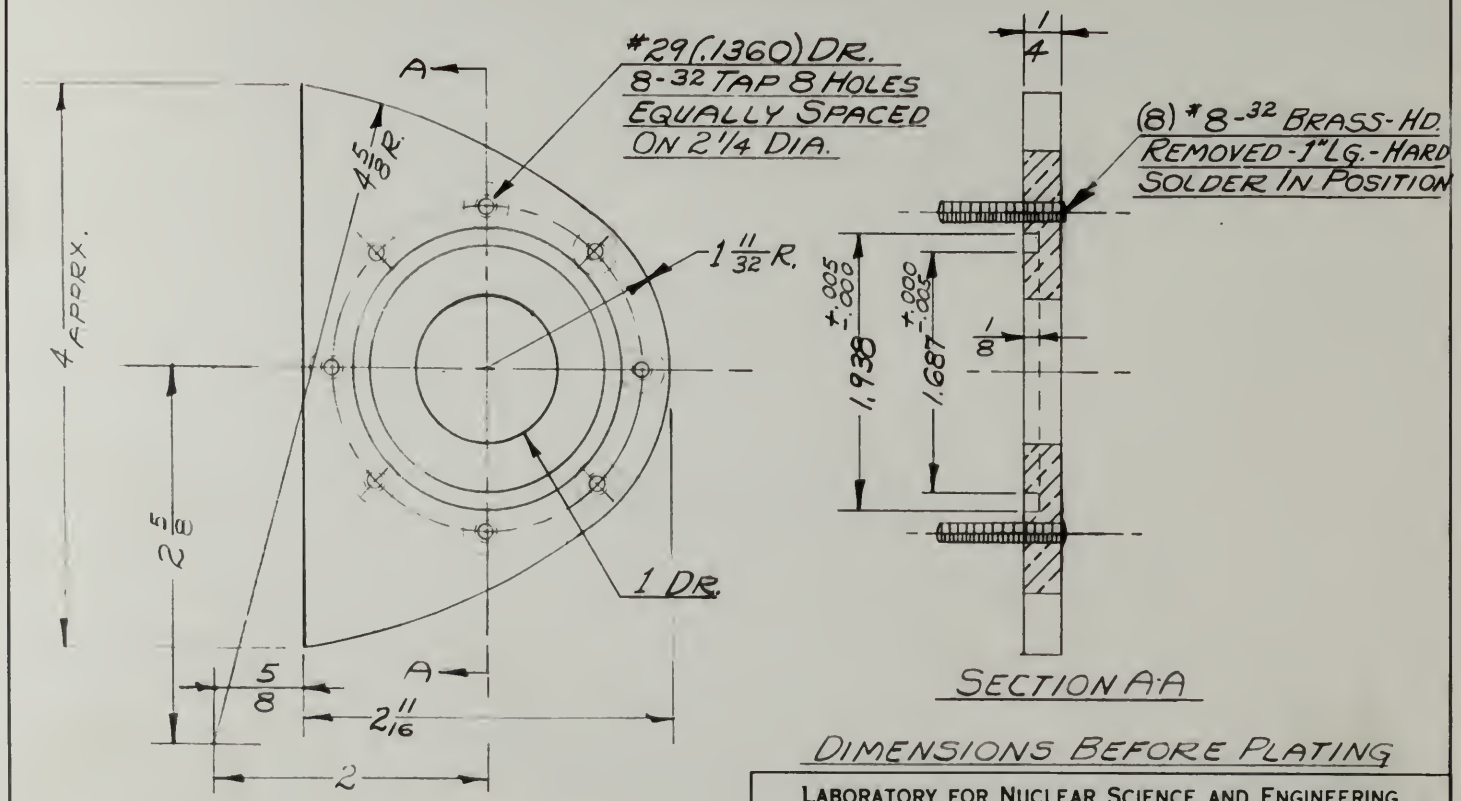

DIMENSIONS BEFORE PLATING

MAT'L BRASS

HARD SOLDER TO B-1025-P AT ASSEMBLY

TOLERANCES ON MACHINING DIMENSIONS UNLESS OTHERWISE STATED:
FRACTIONAL ± 1/64" DECIMAL ± .005". ANGULAR ± 1/2°

LABORATORY FOR NUCLEAR SCIENCE AND ENGINEERING
MASSACHUSETTS INSTITUTE OF TECHNOLOGY
CAMBRIDGE. MASS.

DRAWN FOR ROWEN-DARE	APPROVED BY
DRAWN BY SMITH	SCALE FULL SIZE
CHECKED BY	DATE AUGUST 29, 1947

TITLE: MULTIPLIER DETECTOR WINDOW SEAT

DWG. NO. C-1025-Q | FILE 6421

PRINTED BY SPAULDING MOSS CO. BOSTON MASS. RE ORDER NO. A-220

DWG. NO. C-1025-Q

DWG. NO. C-1025-S

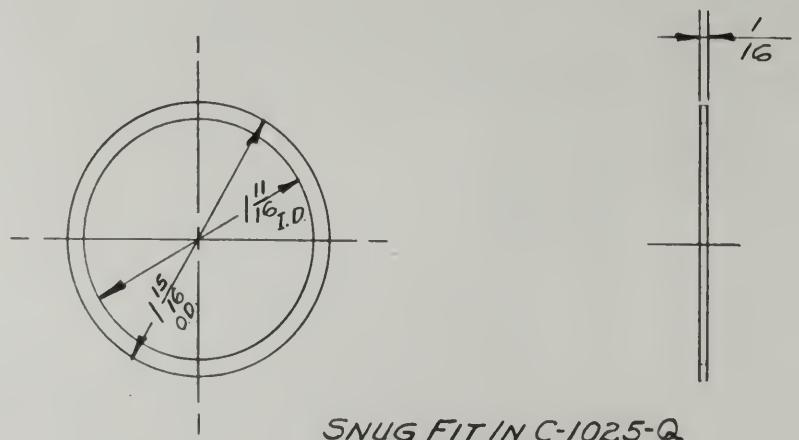

SNUG FIT IN C-1025-Q

MAT'L
NEOPRENE

LABORATORY FOR NUCLEAR SCIENCE AND ENGINEERING
MASSACHUSETTS INSTITUTE OF TECHNOLOGY
CAMBRIDGE. MASS.

DRAWN FOR ROWEN-DARE	APPROVED BY
DRAWN BY SMITH	SCALE FULL SIZE
CHECKED BY	DATE AUGUST 29, 1947

TITLE:
MULTIPLIER DETECTOR-WINDOW GASKET

DWG. NO. C-1025-S | FILE 6421

TOLERANCES ON MACHINING DIMENSIONS UNLESS OTHERWISE STATED
FRACTIONAL ± 1/64" DECIMAL ± .005". ANGULAR ± 1/2°

DWG. NO. C-1025-S

DWG. NO. C-1025-R

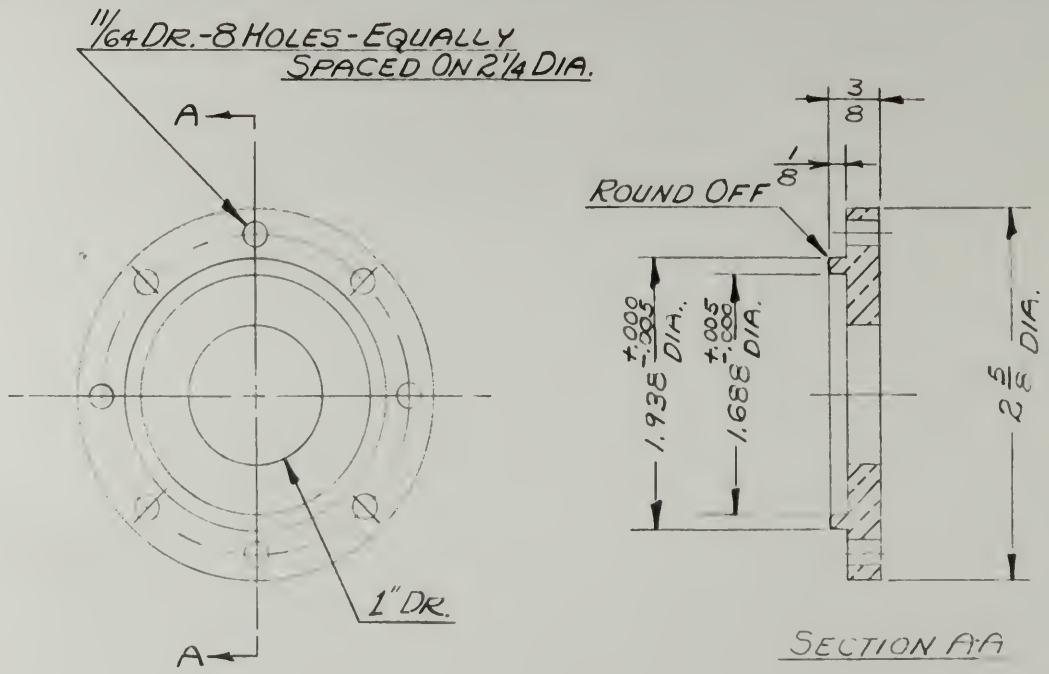

MAT'L BRASS

DIMENSIONS BEFORE PLATING

LABORATORY FOR NUCLEAR SCIENCE AND ENGINEERING MASSACHUSETTS INSTITUTE OF TECHNOLOGY CAMBRIDGE. MASS.	
DRAWN FOR ROWEN	APPROVED BY
DRAWN BY SMITH	SCALE FULL SIZE
CHECKED BY	DATE AUGUST 21, 1947
TITLE: MULTIPLIER DETECTOR WINDOW	
DWG. NO. C-	FILE

TOLERANCES ON MACHINING DIMENSIONS UNLESS OTHERWISE STATED
FRACTIONAL ± 1/64" DECIMAL ± .005" ANGULAR ± 1/2°

DWG. NO. C-1025-R

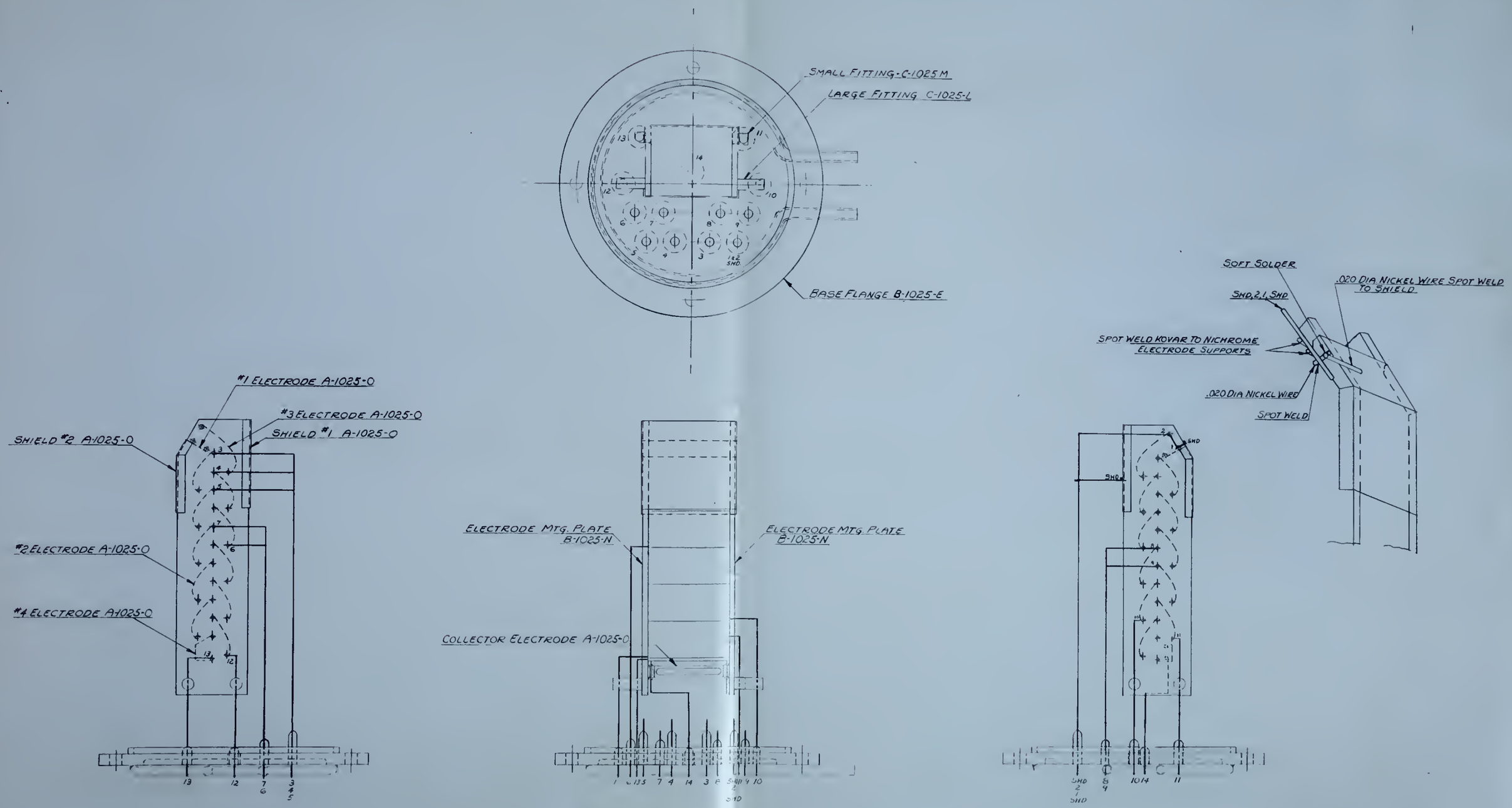

ALSO SEE ISOMETRIC DWG B-1025-W

LABORATORY FOR NUCLEAR SCIENCE AND ENGINEERING
MASSACHUSETTS INSTITUTE OF TECHNOLOGY
CAMBRIDGE MASS

DRAWN FOR ROWEN-DAVE	APPROVED BY
DRAWN BY SMITH	SCALE FULL SIZE
CHECKED BY	DATE AUGUST 28, 1947
TITLE MULTIPLIER DETECTOR LEAD-IN CONNECTION	
DWG NO D-1025-V	FILE C421

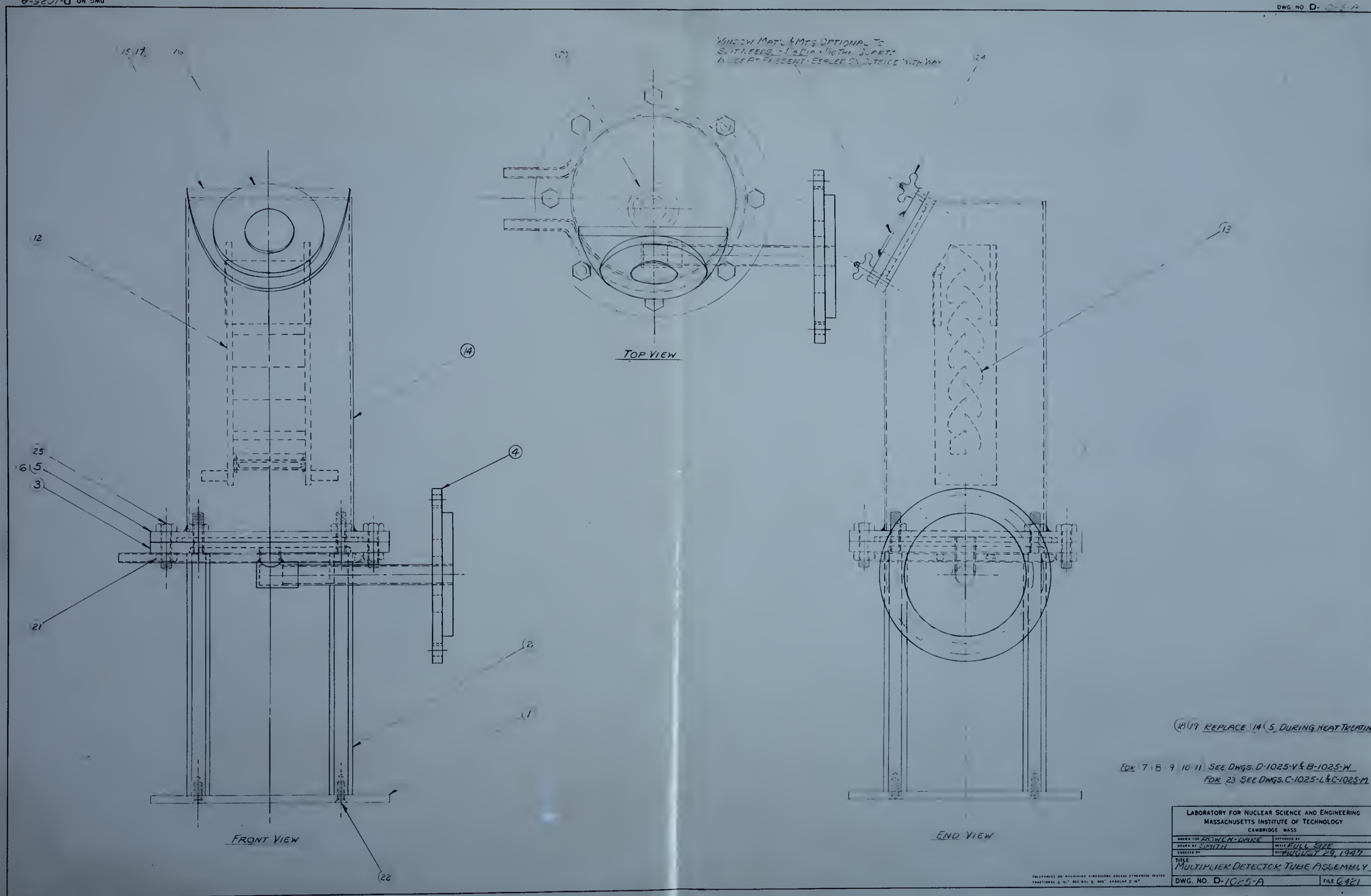
DWG NO D-1025-A
WINDOW MAT'L & MTG OPTIONAL TO
SLIT NEEDS - 1/8 DIA x 1/16 THK QUARTZ
NOSE AT PRESENT - SEALED ON OUTSIDE WITH WAX
TOP VIEW
FRONT VIEW
END VIEW
(18)(19) REPLACE (14)(5) DURING HEAT TREATING
FOR 7 8 9 10 11 SEE DWGS. D-1025-V & B-1025-W
FOR 23 SEE DWGS. C-1025-L & C-1025-M
LABORATORY FOR NUCLEAR SCIENCE AND ENGINEERING
MASSACHUSETTS INSTITUTE OF TECHNOLOGY
CAMBRIDGE MASS
DRAWN FOR ROWEN-DARE
APPROVED BY
DRAWN BY SMITH
SCALE FULL SIZE
CHECKED BY
DATE AUGUST 29, 1947
TITLE MULTIPLIER DETECTOR TUBE ASSEMBLY
DWG. NO. D-1025-A
FILE 6421

APPENDIX D

PROPERTIES OF BERYLLIUM COPPER USED IN MAKING THE DYNOFS

The alloy was obtained from the Beryllium Company of America. It is identified as their No. 25 alloy. It is known to have the following characteristics:

Thickness 0.006"

Condition

Annealed
Elongation 40%
Hardness 78.000 Brinell

APPENDIX E

Listed below is the capacity data on the vacuum pump used in this investigation:

Diffusion Pump: 2 stage oil pump produced by Distillation Products Inc. of Rochester, N.Y. The pump is designated VMP10 and is rated at 10 liters per second at 10^{-4} mm of Hg.

Fore Pump: Duo deal rotary oil pump No. 1400B manufactured by W. M. Welch Manufacturing Co. of Chicago, Ill. This pump is rated at 0.1 liters per second. Under ideal operating conditions it will pump a system to 10^{-3} mm of Hg.

APPENDIX F

The nickel shields at the upper end of the electrode assembly were designed to have two functions: one, they help to create a field free region in the volume enclosed by the shields and dynodes 1 and 2; two, they prevent ion return from the high numbered dynodes to the low numbered dynodes by collecting any ions which may have a free line of flight to the shields. Further, the shields will alter the surface charge in the region of dynodes 3 and 4 in such a manner that ions will be collected in this region and may not proceed to dynodes 1 or 2.

APPENDIX G

RISE TIME LIMITATION OF AN AMPLIFIER

Consider a single vacuum tube arranged as an amplifier with a plate load resistance R and a capacitance C shunting the plate of the tube. Designate the transconductance of the tube by g. Assume that the grid signal is that pictured in Fig. 1, characterized by a rise time δ and an amplitude E. The transient response of the plate voltage, e, to this signal may be obtained as the solution to the following differential equation:

$$\frac{e}{R} + C\frac{de}{dt} = \frac{gE}{\delta}\left[t\,u(t) - (t-\delta)\,u(t-\delta)\right] \tag{1}$$

Solving,

$$e(t) = \frac{gE}{C\delta}\,T^2\left[\frac{t}{T} - \left(1-\varepsilon^{-t/T}\right)\right] \tag{2}$$

where

$T = RC$

The plate voltage change which occurs during the grid signal rise time is obtained by giving t the value δ in (2). The result may be expressed as

$$e(\delta) = \frac{gE\delta}{C}\left\{\frac{1 - \dfrac{1-\varepsilon^{-\delta/T}}{\delta/T}}{\delta/T}\right\} \tag{3}$$

The value of the quantity in braces is shown plotted in Fig. 2. It is seen to have its maximum value, 0.5, where T, the plate circuit time constant, is large compared to the rise time of the grid signal. Stated roughly, the break away from the zero signal axis in response to a step

APPENDIX C

RISE TIME DIMINUTION OF AN AMPLIFIER

Consider a single vacuum tube arranged as an amplifier with a plate load resistance R and a capacitance C shunting the plate of the tube. Designate the transconductance of the tube by ε. Assume that the grid signal is that pictured in Fig. 1, characterized by a rise time δ and an amplitude E. The transient response of the plate voltage, e, to this signal may be obtained as the solution to the following differential equation:

$$\frac{e}{R} + C\frac{de}{dt} = \frac{\varepsilon E}{\delta}\left[t\,u(t) - (t-\delta)\,u(t-\delta)\right] \qquad (1)$$

Solving,

$$e(\delta) = \frac{\varepsilon E}{C\delta}\,T^2\left[\frac{\delta}{T} - \left(1 - e^{-\delta/T}\right)\right] \qquad (2)$$

where

$$T = \varepsilon R$$

The plate voltage change which occurs during the grid signal rise time is obtained by giving t the value δ in (2). The result may be expressed as

$$e(\delta) = \frac{\varepsilon E\delta}{C}\left\{\frac{1 - \dfrac{1 - e^{-\delta/T}}{\delta/T}}{\delta/T}\right\} \qquad (3)$$

The value of the quantity in brace is shown plotted in Fig. 2. It is seen to have its maximum value, 0.5, where T, the plate circuit time constant, is large compared to the rise time of the grid signal. Stated roughly, the break away from the zero signal axis is performed in a step

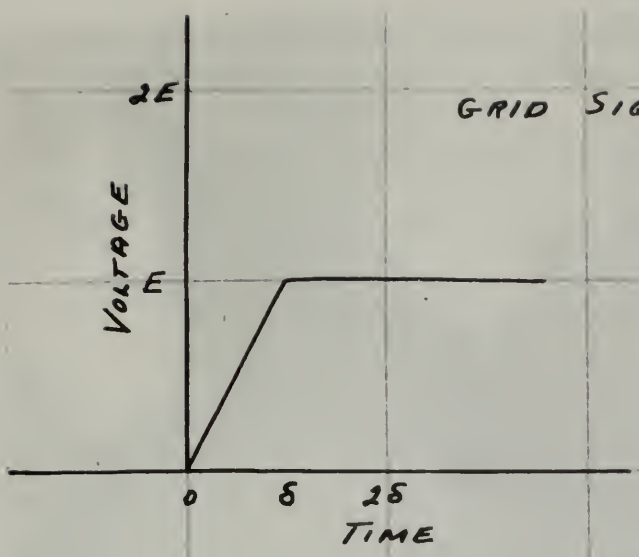
GRID SIGNAL
2E
E
VOLTAGE
0
δ
2δ
TIME

FIG. 1

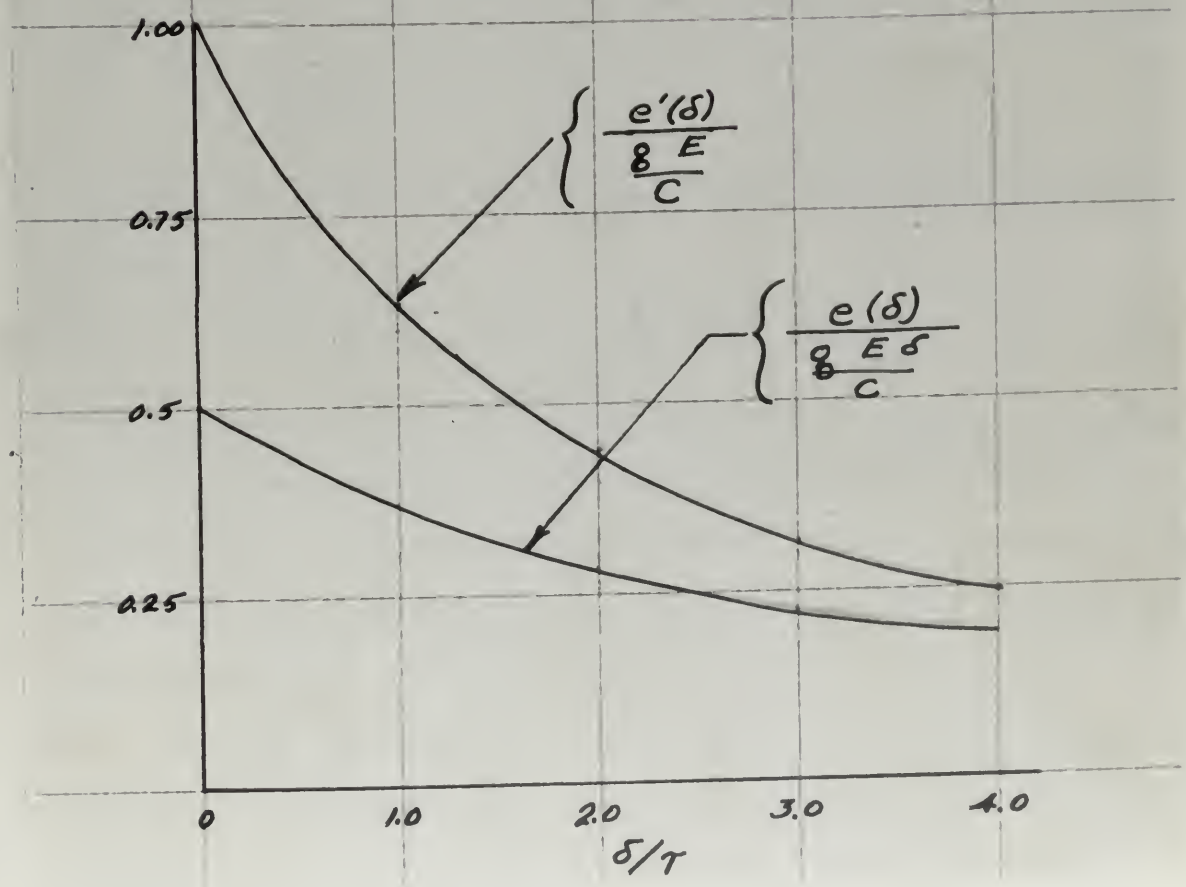
1.00
0.75
0.5
0.25
0
1.0
2.0
3.0
4.0
δ/T
e'(δ) / (E/C)
e(δ) / (Eδ/C)

FIG. 2

signal is sharpest in a circuit having a long plate circuit time constant.

Assuming that this condition is met, then the maximum pulse gain which can be realized from the amplifier during the grid signal rise interval is given by

$$\frac{e(\delta)}{E} = \frac{g\,\delta}{2C} \qquad (4)$$

Actually, the amplifier can do better than this if a time lag in the response is acceptable. This is so because the rise rate of the amplifier response starts at zero and builds up to a maximum at t = . If the amplifier is so designed that the plate response during an interval of time while the maximum response rate is effective is usable, then the maximum gain obtainable from the amplifier while preserving the rise time is given by

$$\left[\frac{de(t)}{dt}\Big|_{t=\delta}\right] \Big/ E$$

Performing the differentiation of (2) the maximum gain is found to be

$$\frac{[e'(\delta)]\,\delta}{E} = \frac{g\,\delta}{C}\left\{\frac{1-\varepsilon^{-\delta/T}}{\delta/T}\right\} \qquad (5)$$

The quantity in braces is also plotted in Fig. 2. Maximum gain is again obtained for the condition that the plate circuit time constant be large compared to the signal rise time. In this case however, the quantity in brackets is seen to have a maximum value of unity.

It may therefore be stated that the maximum video gain which is obtainable from a single tube amplifier that has a response rise time equal to the grid signal rise time is

signal is accompanied by a strength loading a long grain alternating stress.

Assuming that this hypothesis is true, then the maximum gain which can be realized from the amplifier during the grid signal rise interval is given by:

$$\frac{e(t)}{E} = \frac{RC}{\tau} \qquad (1)$$

Naturally, the amplifier can not actually have this if a time lag in the response is encountered. This is so because the rise rate of the amplifier becomes slower as time and voltage go to a maximum as $t \to \infty$. If the amplifier is to be designed that the plate response curve as illustrated at time t_m is the maximum response rate is attained is sought, then the maximum gain obtainable from the amplifier which corresponds this rise time is given by

$$\left[\frac{de(t)}{dt}\Big|_{t=t_m}\right] \Big/ E$$

Differentiating the exponentiation of (1) the maximum gain is found to be

$$\frac{[e'(t)]_m}{E} = \frac{RC}{\tau}\left[\frac{1-e^{-t_m/\tau}}{t_m}\right] \qquad (2)$$

The variation in tubes in also plotted in this to maximum gain is again obtained upon the basis illustrated that the plate rise time should be large compared to the signal rise time. In this case however, the quantity in brackets is seen to have a maximum value of unity.

It was interesting to note that the maximum rise gain which is obtainable from a single tube amplifier has a maximum value than equal to the grid signal rise time to

limited to

$$G_{max} = \frac{g\delta}{C} \qquad (6)$$

where

g is the amplifier tube transconductance

c is the effective capacitance shunting the plate of the tube

δ is the rise time of the grid signal

APPENDIX H

OPTIMUM GAIN-PER-STAGE FOR ACHIEVING A HIGH UPPER CUTOFF FREQUENCY IN A RESISTANCE-CAPACITANCE COUPLED AMPLIFIER

n no. of stages

C interstage capacity

R plate load resistor

gm tube transconductance

A total overall gain

$w = 2\pi f$ × angular frequency

Z plate circuit impedance

f_2 upper cutoff frequency

The plate circuit of the amplifier offers the following impedance to ground, neglecting lower cutoff considerations.

$$\frac{\frac{R}{jwC}}{R + \frac{1}{jwC}} = \frac{R}{1 + jwCR} = \frac{R}{\sqrt{1 + w^2C^2R^2}} \angle \theta$$

The frequency at which the gain of a stage is $\frac{1}{X}$ times the midband gain is given by the solution of

$$\frac{R}{\sqrt{1 + w^2C^2R^2}} = \frac{R}{X}$$

or

$$f_2 = \frac{1}{2\pi}\sqrt{\frac{X^2 - 1}{RC}} \qquad (1)$$

APPENDIX B

[illegible]

R res. of stage

C interstage capacity

E plate load resistor

g_m tube transconductance

A total overall gain

$\omega = 2\pi f$ = angular frequency

C plate circuit impedance

f_c upper cutoff frequency

The plate circuit of the amplifier forms the polarizing impedance to ground, employing lower output capacitance.

$$\frac{\frac{1}{j\omega C}}{R + \frac{1}{j\omega C}} = \frac{R}{R + j\omega CR} = \frac{R}{\sqrt{1 + \omega^2 C^2 R^2}}$$

The frequency at which the gain of a stage is $\frac{1}{\sqrt{2}}$ times the stated gain is given by the solution of

$$\frac{1}{\sqrt{1 + \omega_c^2 C^2 R^2}} = \frac{1}{\sqrt{2}}$$

or

$$f_c = \frac{1}{2\pi}\sqrt{\frac{2 - 1}{RC}} \qquad (4)$$

The value of f_2 given by (1) will have the significance of being the overall upper cutoff frequency if

$$\frac{1}{X^n} = 0.707 \qquad (2)$$

The number of stages is related to the overall gain by

$$(gmR)^n = A \qquad (3)$$

so that

$$n = \frac{\ln A}{\ln(gmR)} \qquad (4)$$

Therefore, substituting (4) into (2) and solving for X

$$X = \left(\frac{1}{0.707}\right)^{1/n} = \left(\frac{1}{0.707}\right)^{\frac{\ln gmR}{\ln A}}$$

$$= e^{.3646 \frac{\ln gmR}{\ln A}}$$

$$= (gmR)^{\frac{.3646}{\ln A}} \qquad (5)$$

The value of the plate load resistance for maximum bandwidth may be obtained by differentiating (1) and equating the result to zero.

$$\frac{df_2}{dR} = \frac{2\pi RC \frac{2X}{2\sqrt{X^2-1}} \frac{dX}{dR} - \sqrt{X^2-1}\ 2\pi C}{(2\pi RC)^2} = 0$$

This gives the relation

$$XR\frac{dx}{dR} = X^2-1 \qquad (6)$$

(5) may be differentiated to obtain an expression for $\frac{dx}{dR}$.

The value of $\frac{\lambda}{\lambda'}$ given by (3) will have the slightly-
shape of being the vertical cross cavity frequency is

$$\frac{\lambda}{\lambda'} = 0.707 \qquad (3)$$

The number of stages is related to the overall gain

by

$$(G\alpha)^N = G \qquad (4)$$

So that

$$N = \frac{\ln G}{\ln(G\alpha)} \qquad (5)$$

Therefore, substituting (4) into (3) and solving

for $\frac{\lambda}{\lambda'}$

$$\frac{\lambda}{\lambda'} = \left(\frac{0.707}{G\alpha}\right)^{1/N} = \left(\frac{0.707}{G\alpha}\right)^{\frac{\ln G}{\ln(G\alpha)}}$$

$$= \left(\frac{0.707}{G\alpha}\right)^{\frac{\ln G}{\ln G + \ln \alpha}}$$

$$= \left(\frac{0.707}{G\alpha}\right)^{\frac{\ln G}{\ln G + \ln \alpha}} \qquad (6)$$

The value of the plate zone variations for maximum
bandwidth may be obtained by differentiating (1) and
equating the result to zero.

$$\frac{d\lambda}{d\alpha} = \frac{2\pi\alpha\left[\sqrt{\alpha^2-1}\,\frac{d\alpha}{dx} - \alpha\frac{d\sqrt{\alpha^2-1}}{dx}\right]}{(1+\alpha^2)^2} = 0$$

This gives the relation

$$2\alpha\frac{d\alpha}{dx} = (\alpha^2-1) \qquad (7)$$

(7) may be differentiated to obtain an expression for

$\frac{d^2\alpha}{dx^2}$.

$$\frac{dx}{dR} = \frac{.3646}{\ln A} (gm\,R)^{\frac{.3646}{\ln A}} \frac{1}{gmR} gm$$

$$\frac{dx}{dR} = \frac{.3646}{\ln A} \frac{X}{R} \qquad (7)$$

Substituting (7) into (6)

$$\frac{.3646}{\ln A} X^2 = X^2 - 1$$

$$X^2 = \frac{1}{1 - \frac{.3646}{\ln A}} \qquad (8)$$

From (5) and (8)

$$X^2 = (gm\,R)^{2\left(\frac{.3646}{\ln A}\right)} = \frac{1}{1 - \frac{.3646}{\ln A}} \qquad (9)$$

Let $y = \frac{.3646}{\ln A}$

Since y is quite small compared to unity

$$(gmR)^{y} \doteq 1 + \ln(gmR)y + 1/2 \ln^2 (gmR)y^2$$

$$\frac{1}{1-y} \doteq 1 + y + y^2$$

Accordingly, an explicit solution for y may be obtained.

$$y = \frac{1 - 2\ln (gmR)}{1 - 2\ln^2(gmR)}$$

It follows then

$$\ln A = 0.3646 \frac{1 - 2 \ln^2 (gmR)}{1 - 2 \ln (gmR)} \qquad (10)$$

When this formula is plotted it is found that the optimum value of gm R is very nearly $e^{1/2}$ for all practical values of A, the overall gain.

$$\frac{dx}{dt} = \frac{10\,x}{1+x} \left(\cos\theta\right)^{\frac{10x}{1+x}} \frac{\cos\theta}{t} \quad \text{or}$$

$$\frac{dx}{dt} = \frac{10\,x}{1+x} \frac{\cos\theta}{t} \tag{7}$$

substituting (7) into (4)

$$\frac{10\,x}{1+x} x_2 = x_2 - 1$$

$$x_2 = \frac{1}{1 - \frac{10\,x}{1+x}} \tag{8}$$

from (5) and (8)

$$x_1 = \left(\cos\theta\right)^{\left(\frac{10\,x}{1+x}\right)} x = \frac{1}{1 - \frac{10\,x}{1+x}} \tag{9}$$

Let $y = \frac{10\,x}{1+x}$

Since $\bar{x}$ is being small compared to unity

$$\left(\cos\theta\right)^{y} \cong 1 + \ln(\cos\theta)\,y + 1/2\,\ln^2(\cos\theta)\,y^2$$

$$\frac{y-1}{y} \cong 1 + y + y^2$$

Similarly, in matrix notation the $\bar{x}$ and $\bar{x}$ in the matrix.

$$\bar{x} = \frac{1 - \sin(\cos\theta)}{1 - \sin(\cos\theta)}$$

If follows that

$$\ln \cong 0.1\,\ln \frac{1 - 2\ln(\cos\theta)}{1 - 2\ln(\cos\theta)} \tag{10}$$

Now this result indicate in matrix is to round off the optimum value of $\ln \bar{x}$ is very nearly $\frac{1}{10}$ [12] [13] [14] [15] [16] [17] of the nominal value.

In view of this fact, the number of stages required to give optimum bandwidth is given by

$$n = 2 \ln A$$

The amount by which each stage is down in gain at the cutoff frequency is given by

$$K = 1.414^{\frac{1}{2 \ln A}} = 1.19^{\frac{1}{\ln A}}$$

Finally, the cutoff frequency may be written as

$$f_2 \doteq 0.1 \frac{g_m}{C} \sqrt{1.414^{\frac{1}{\ln A}} - 1}$$

$$f_2 = 0.1 \frac{g_m}{C} \sqrt{\frac{.347}{\ln A}}$$

In view of this item, the number of atoms involved in plane crystal geometry is given by:

$$n = 2 \log_2 L$$

The amount of which atoms is seen in units of the matrix dimension is given by

$$I = 1.414 \frac{\log_2 L}{L} = 1.414 \frac{L}{\log_2 L}$$

Finally, the unit frequency may be written as:

$$f_1 = 0.1 \frac{\log_2}{L} \sqrt{1.414 \frac{L}{\log_2 L}}$$

$$f_2 = 0.1 \frac{\log_2}{L} \sqrt{\frac{L}{\log_2 L}}$$

APPENDIX I

ANALYSIS OF PULSE SHAPES DUE TO LOW FREQUENCY COMPONENTS

It is herein attempted to develop a criterion for judging how low the low frequency cutoff of a circuit must be made in order to preserve a certain degree of pulse waveform. A suitable pulse will be resolved into its frequency components. It then will be reconstructed using only the components within a restricted frequency band, assuming that within this band all frequencies suffer equal attenuation and phase shift proportional to frequency. This will be performed for various frequency bands and the resulting pulse waveforms will be compared with the original.

A convenient input pulse for this purpose is a single cycle of a sine wave because the high-frequency components of such a pulse are almost negligible. The role played by the low-frequency end of its spectrum will accordingly be all the more apparent.

Let the input pulse be that shown in Fig. 1 given by

$$e = (1-\cos\beta t)\left[u(t) - u\left(t-\frac{2\pi}{\beta}\right)\right]$$

The Laplace Transform of this function is

$$E(s) = \frac{\beta^2}{s(s^2+\beta^2)}\left[1-\varepsilon^{-\frac{2\pi}{\beta}s}\right]$$

The real-frequency spectrum is given by

$$E(j\omega) = \frac{\beta^2}{j\omega(\beta^2-\omega^2)}\left[1-\varepsilon^{-j\frac{2\pi}{\beta}\omega}\right]$$

or

$$E(j\omega) = \frac{2\beta^2\sin\frac{\pi}{\beta}\omega}{\omega(\beta^2-\omega^2)}\,\varepsilon^{-j\frac{\pi}{\beta}\omega}$$

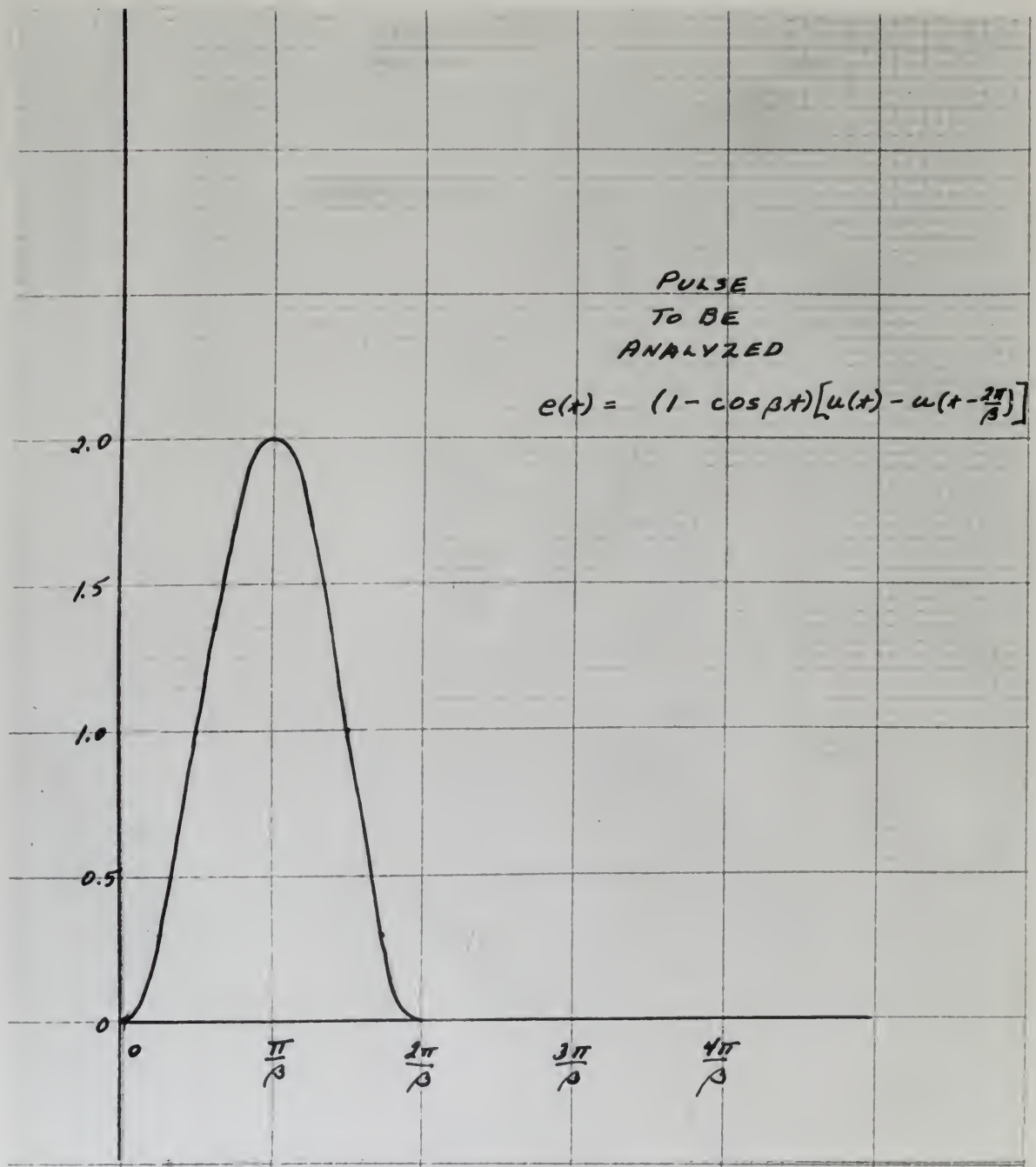
PULSE
TO BE
ANALYZED
$e(t) = (1 - \cos\beta t)\left[u(t) - u\left(t - \frac{2\pi}{\beta}\right)\right]$
2.0
1.5
1.0
0.5
0
0
$\frac{\pi}{\beta}$
$\frac{2\pi}{\beta}$
$\frac{3\pi}{\beta}$
$\frac{4\pi}{\beta}$

FIG. 1

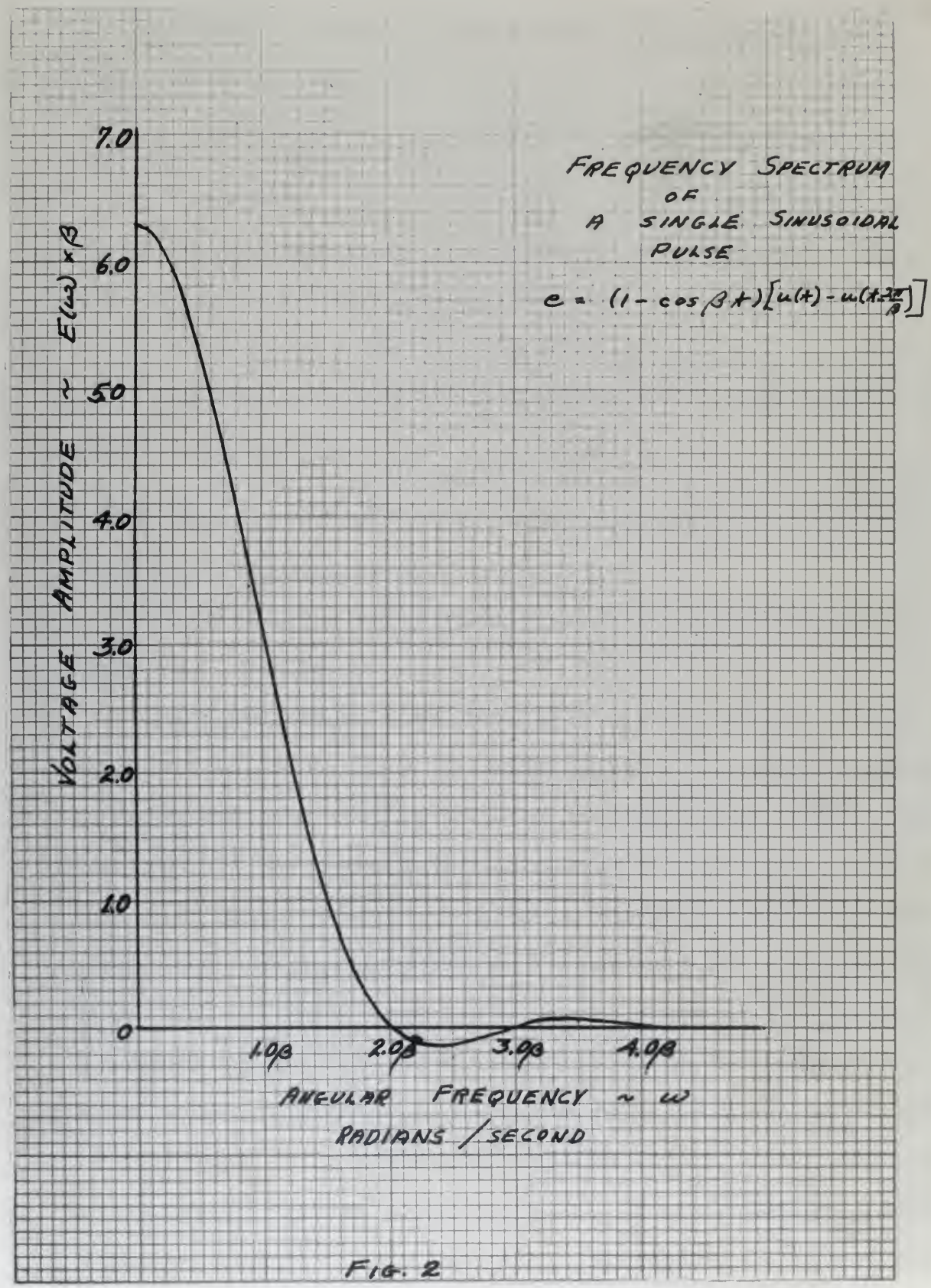
FREQUENCY SPECTRUM
OF
A SINGLE SINUSOIDAL
PULSE
$e = (1 - \cos\beta t)[u(t) - u(t - \frac{2\pi}{\beta})]$
VOLTAGE AMPLITUDE ~ $E(\omega) \times \beta$
7.0
6.0
5.0
4.0
3.0
2.0
1.0
0
1.0β
2.0β
3.0β
4.0β
ANGULAR FREQUENCY ~ ω
RADIANS / SECOND

FIG. 2

By the Fourier Inverse Transform the voltage pulse after time $t = \frac{\pi}{\beta}$ is given by

$$e(t) = \frac{1}{2\pi} \int_{-\infty}^{\infty} E(j\omega)\, e^{-j\omega t}\, d\omega$$

This may be expressed as

$$e(t) = \frac{1}{\pi} \int_{0}^{\infty} |E(j\omega)| \cos \omega\left(t - \frac{\pi}{\beta}\right) d\omega$$

where $|E(j\omega)|$ represents the algebraic magnitude of $E(jw)$. This in turn may be approximated by

$$e(t) = \sum_{n=0}^{\infty} \frac{|E(jn\Delta\omega)|}{\pi} \cos\left[n\Delta\omega\left(t - \frac{\pi}{\beta}\right)\right] \Delta\omega$$

The algebraic magnitude of $E(jw)$ is plotted in Fig. 2. Partial sums of the form

$$e(t) = \sum_{n=a}^{b} \frac{|E(jn\Delta\omega)|}{\pi} \cos\left[n\Delta\omega\left(t - \frac{\pi}{\beta}\right)\right] \Delta\omega$$

are shown plotted in Fig. 4. These were obtained graphically from the components drawn in Fig. 3.

The resulting pulse wave forms for various frequency bands are plotted in Fig. 5.

Comparing these with the original the following conclusions may be drawn. If the circuit had a passband which lay entirely above $\beta/2\pi$, or even entirely above $\frac{0.5\beta}{2\pi}$, the response of the circuit to a single sine wave pulse would not be a single pulse at all but a train of pulses. On the other hand, if the passband of the circuit lay entirely below $\beta/2\pi$ and had a lower cutoff frequency as small as one tenth of its upper cutoff, the output from the circuit would have a distinct pulse-like character. In order that the pulse width be preserved it is sufficient that the upper cutoff frequency of the circuit be as great as $\beta/2\pi$. If a completely smooth trailing edge of the output pulse is required, a higher upper

by the inverse Fourier transform the voltage pulse given

by $t = \frac{\pi}{\omega_0}$ is given by

$$e(t) = \frac{1}{2\pi} \int_{-\infty}^{\infty} E(j\omega)\, e^{j\omega t}\, d\omega$$

This may be expressed as

$$e(t) = \frac{1}{\pi} \int_{0}^{\infty} |E(j\omega)| \cos \omega\left(t - \frac{\pi}{\omega_0}\right) d\omega$$

where $|E(j\omega)|$ represents the algebraic magnitude of $E(j\omega)$.

This in turn may be approximated by

$$e(t) = \sum_{n=0}^{\infty} \frac{|E(jn\omega_0)|}{\pi} \cos\left[n\omega_0\left(t - \frac{\pi}{\omega_0}\right)\right] d\omega$$

The algebraic magnitude of $E(j\omega)$ is plotted in Fig. 8, initial phase of the form

$$e(t) = \sum_{n=0}^{\infty} \frac{|E(jn\omega_0)|}{\pi} \cos\left[n\omega_0\left(t - \frac{\pi}{\omega_0}\right)\right] d\omega$$

are shown plotted in Fig. 9. These zero-phase components provide the exponentials shown in Fig. 5.

The resulting pulse were found for various frequency bands and plotted in Fig. 6.

Comparing these with the original the following observations may be drawn. It may already had a frequency which only exactly shown, $\omega/2\pi$, or even exactly zero, $\frac{d\omega/2\pi}{d\omega}$, the variation of the strength in a single band pulse would only be a single pulse as all but a length of unity. On the other hand, if the frequency of the channel by exactly the centerline band and had a lower cutoff frequency as small as one hundred the upper cutoff, the output from the channel would have a distinct pulse-like behavior. It should that the pulse width be increased if is sufficient that the upper cutoff frequency of the channel be as great as $\omega/2\pi$. If a sufficiently small twelfth pulse of the upper pulse is required, a higher upper

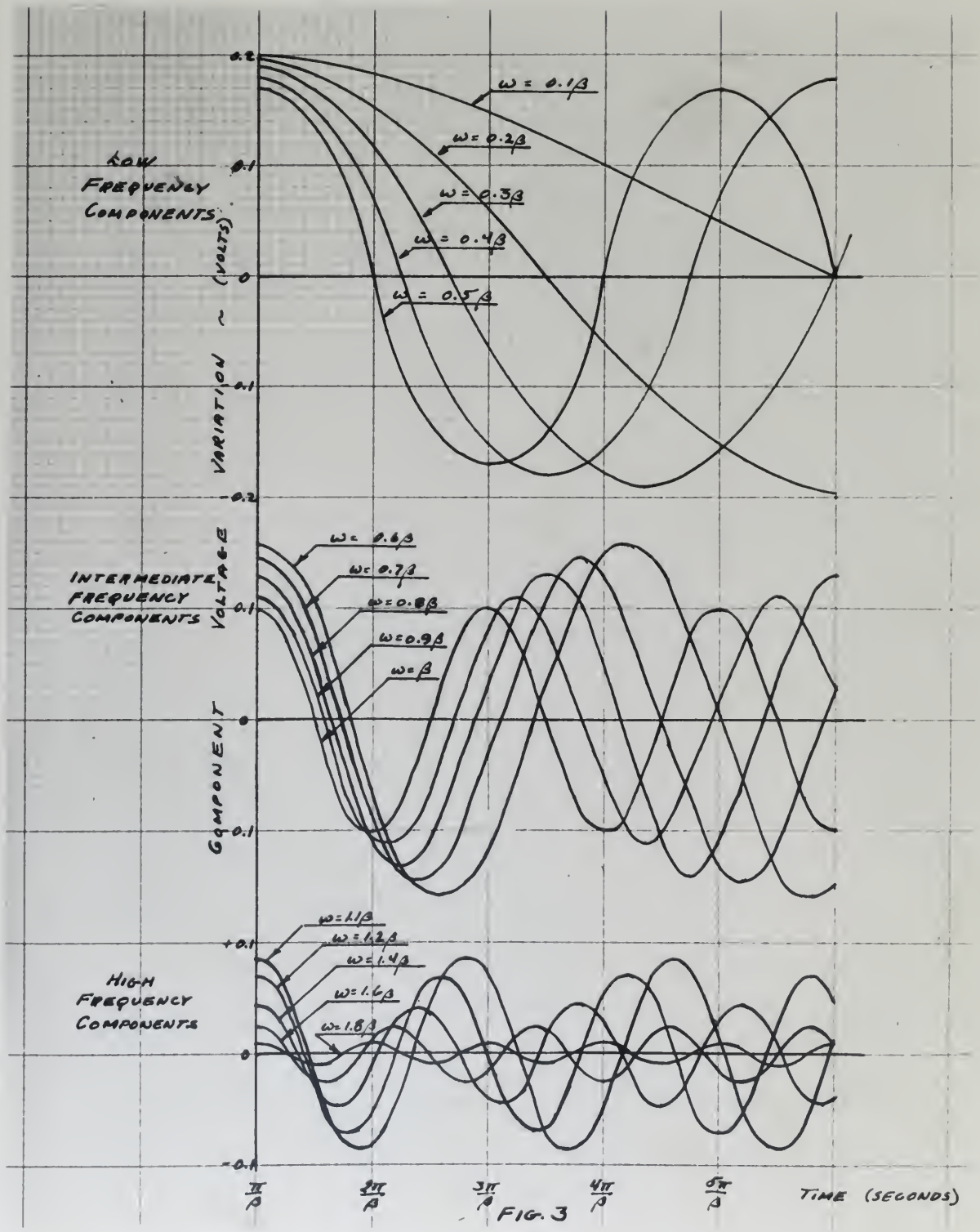
LOW FREQUENCY COMPONENTS
INTERMEDIATE FREQUENCY COMPONENTS
HIGH FREQUENCY COMPONENTS
VARIATION ~ (VOLTS)
VOLTAGE COMPONENT
ω = 0.1β
ω = 0.2β
ω = 0.3β
ω = 0.4β
ω = 0.5β
ω = 0.6β
ω = 0.7β
ω = 0.8β
ω = 0.9β
ω = β
ω = 1.1β
ω = 1.2β
ω = 1.4β
ω = 1.6β
ω = 1.8β
0.2
0.1
0
-0.1
-0.2
+0.1
-0.1
π/β
2π/β
3π/β
4π/β
5π/β
TIME (SECONDS)

FIG. 3

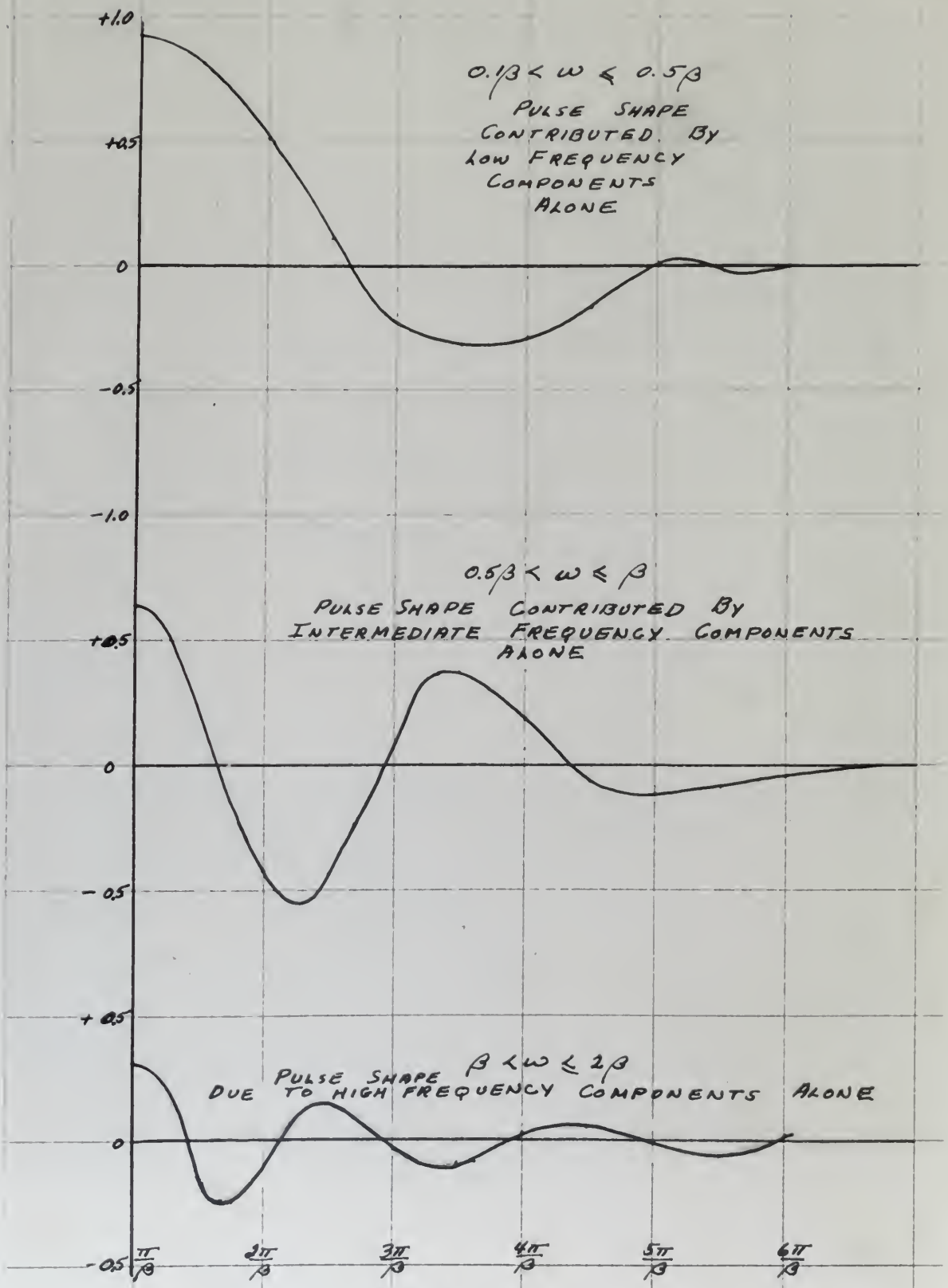
+1.0
+0.5
0
-0.5
-1.0
+0.5
0
-0.5
+0.5
0
-0.5
0.1β < ω ≤ 0.5β
PULSE SHAPE CONTRIBUTED BY LOW FREQUENCY COMPONENTS ALONE
0.5β < ω ≤ β
PULSE SHAPE CONTRIBUTED BY INTERMEDIATE FREQUENCY COMPONENTS ALONE
β < ω ≤ 2β
PULSE SHAPE DUE TO HIGH FREQUENCY COMPONENTS ALONE
π/β
2π/β
3π/β
4π/β
5π/β
6π/β

FIG. 4

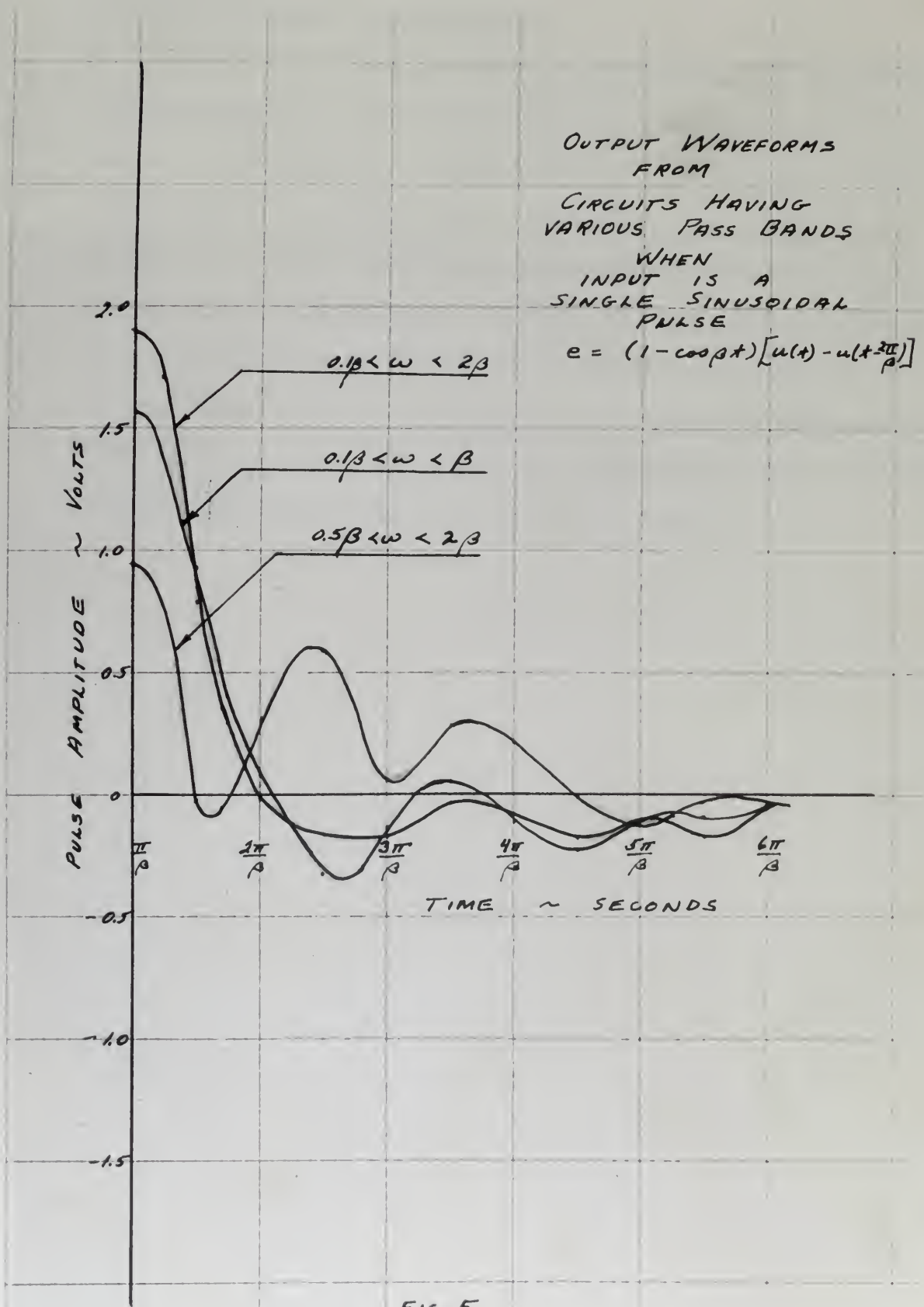
OUTPUT WAVEFORMS FROM CIRCUITS HAVING VARIOUS PASS BANDS WHEN INPUT IS A SINGLE SINUSOIDAL PULSE
$e = (1-\cos\beta t)[u(t) - u(t-\frac{2\pi}{\beta})]$
$0.1\beta < \omega < 2\beta$
$0.1\beta < \omega < \beta$
$0.5\beta < \omega < 2\beta$
PULSE AMPLITUDE ~ VOLTS
2.0
1.5
1.0
0.5
0
-0.5
-1.0
-1.5
$\frac{\pi}{\beta}$
$\frac{2\pi}{\beta}$
$\frac{3\pi}{\beta}$
$\frac{4\pi}{\beta}$
$\frac{5\pi}{\beta}$
$\frac{6\pi}{\beta}$
TIME ~ SECONDS

FIG. 5

cutoff frequency is necessary.

It is felt that the above conclusions may be generalized to apply to any pulse shape by a suitable definition of . Accordingly might be called the central angular frequency of a pulse, and be defined as the angular frequency of a sine wave whose half-period equals the pulse width at half-amplitude. Defined in this way it retains the significance it had in this analysis; namely, the dividing line between frequencies of a spectrum which contribute mostly to the amplitude of a discrete pulse and those which contribute mainly to the pulse shape.

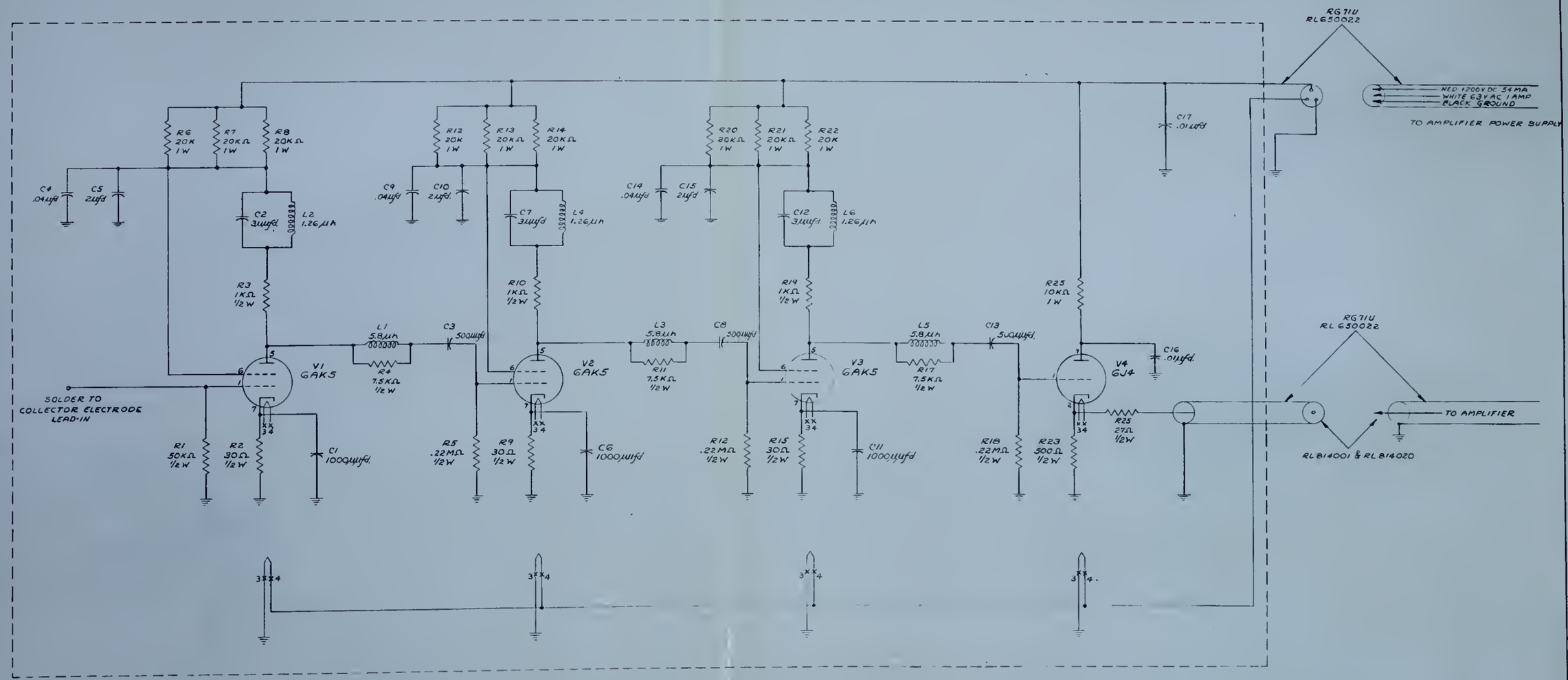

LABORATORY FOR NUCLEAR SCIENCE AND ENGINEERING
MASSACHUSETTS INSTITUTE OF TECHNOLOGY
CAMBRIDGE MASS

DRAWN FOR [illegible]	APPROVED BY
DRAWN BY [illegible]	SCALE NONE
CHECKED BY	DATE SEPT 9, 1947
TITLE [illegible]	
DWG NO D-[illegible]	FILE [illegible]

DWG NO D-1039-B

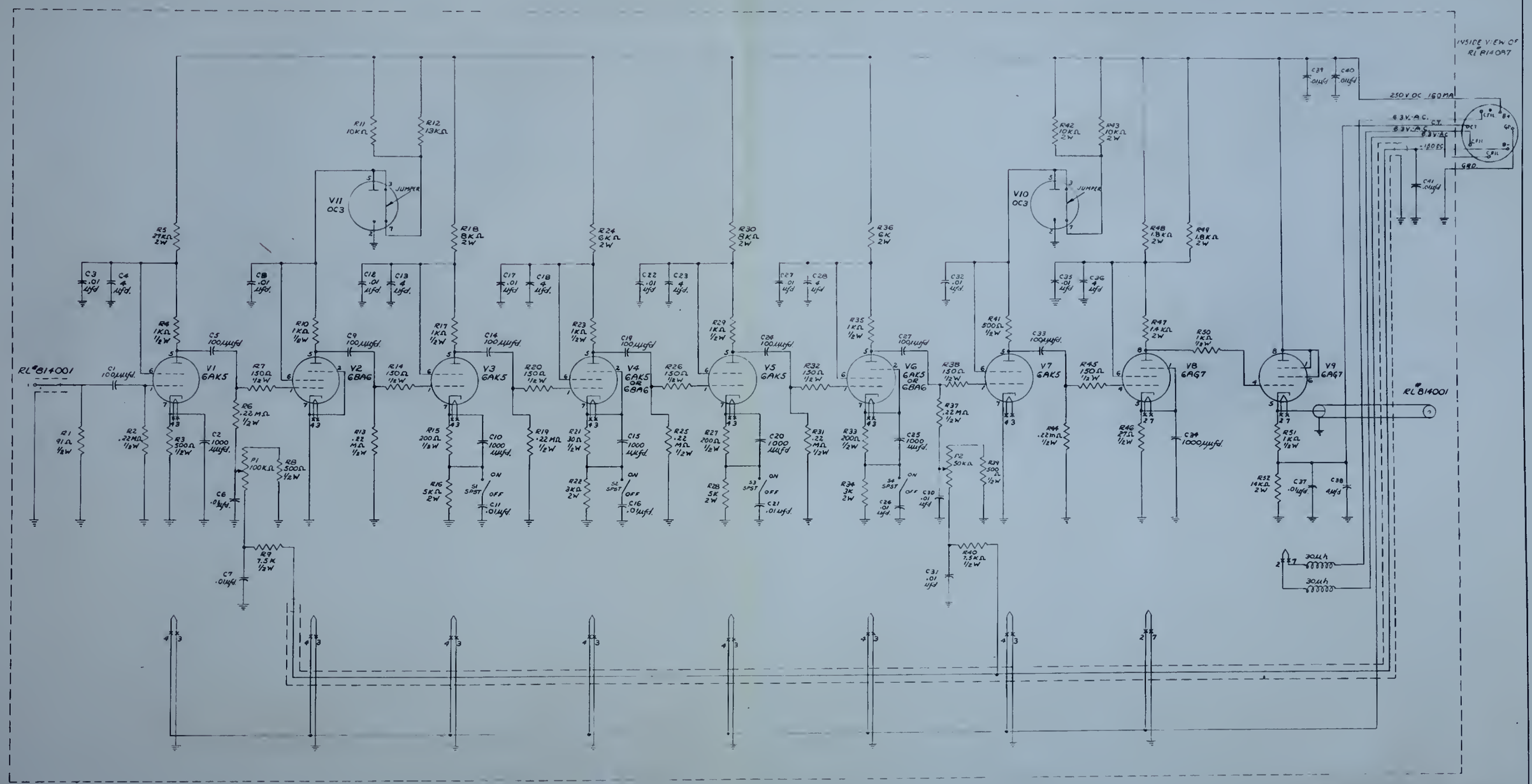

LABORATORY FOR NUCLEAR SCIENCE AND ENGINEERING
MASSACHUSETTS INSTITUTE OF TECHNOLOGY
CAMBRIDGE MASS

DRAWN FOR KOWEN-DARE	APPROVED BY
DRAWN BY SMITH	SCALE NONE
CHECKED BY	DATE SEPT 9, 1947
TITLE MULTIPLIER DETECTOR TUBE AMPLIFIER SCHEMATIC WIRING DIAGRAM	
DWG NO. D-1039-B	FILE 6421

TOLERANCES ON MACHINING DIMENSIONS UNLESS OTHERWISE STATED
FRACTIONAL ± 1/64" DECIMAL ± .005" ANGULAR ± 15'

APPENDIX K

GENERAL RADIO SIGNAL GENERATOR 605B CABLE FITTING

In the course of testing the pre-amplifier it was observed that the General Radio Signal Generator 605B gave a voltage output different from that indicated by its calibrated attenuator setting for frequencies above ten megacycles per second. At the advice of the General Radio Company, a cable fitting was constructed which practically eliminated the discrepancy.

The fitting consists of an adapter between the General Radio coaxial connector of the signal generator and a U.H.F. cable connector, containing in series between the two connections a resistor of 40 ohms. It was found that the voltage at the matched termination of a 50 ohm U.H.F. cable connected to the signal generator through the fitting described bore a constant ratio to the voltage indicated by the signal generator attenuator for all frequencies up to 30 megacycles per second. This ratio was determined to be 0.47.

The fitting is not designed for the constant one volt output terminal, nor for the multiplier setting of 10000. Only the remaining multiplier settings 1, 10, 100, and 1000 cause the output impedance of the signal generator to be 10 ohms for which the fitting is designed.

DATE DUE

7853

Thesis
D16

Dare
Construction & test of
an electron multiplier
alpha particle detector.

thesD16
Construction and test of an electron mul
3 2768 002 09540 8
DUDLEY KNOX LIBRARY